GUILD ◆ EDITION

Woodsmith®

Woodsmith.com

Vol. 38 / No. 226

WOODWORKING CHALLENGE
PUZZLE BOXES

Also:

Simple, Accurate Jigs Every Shop Needs

Custom Details for Better-Looking Projects

Tips & Tricks for:
- Cleaner Router Cuts
- Top-Notch Mortises
- Smooth, Accurate Tenons

A Publication of Cruz Bay Publishing, Inc.

Woodsmith®

CREATIVE HOME GROUP
GENERAL MANAGER Donald B. Peschke
EDITORIAL MEDIA DIRECTOR Bryan Nelson
MANAGING EDITOR Vincent Ancona
SENIOR EDITORS Wyatt Myers, Phil Huber
ASSOCIATE EDITOR Robert Kemp

EXECUTIVE ART DIRECTOR Todd Lambirth
SENIOR ILLUSTRATORS Harlan V. Clark, Dirk Ver Steeg, Peter J. Larson
SENIOR GRAPHIC DESIGNER Bob Zimmerman
GRAPHIC DESIGNER Becky Kralicek

CREATIVE DIRECTOR Ted Kralicek
ASSISTANT DESIGN DIRECTOR Chris Fitch
PROJECT DESIGNER/BUILDER John Doyle
CAD SPECIALIST Steve Johnson
SHOP CRAFTSMAN Dana Myers

SENIOR PHOTOGRAPHERS Crayola England, Dennis Kennedy
ASSOCIATE STYLE DIRECTOR Rebecca Cunningham
SENIOR ELECTRONIC IMAGE SPECIALIST Allan Ruhnke
PRODUCTION ASSISTANT Minniette Johnson
VIDEO EDITOR/DIRECTOR Mark Hayes

Woodsmith® (ISSN 0164-4114) is published bimonthly by Cruz Bay Publishing, Inc., 2200 Grand Ave, Des Moines, IA 50312.
Woodsmith® is a registered trademark of Cruz Bay Publishing.
Copyright© 2016 Cruz Bay Publishing, Inc. All rights reserved.
Subscriptions: Single copy: $6.95.
Canadian Subscriptions: Canada Post Agreement No. 40038201. Send change of address information to PO Box 881, Station Main, Markham, ON L3P 8M6. Canada BN 84597 5473 RT
Periodicals Postage Paid at Des Moines, IA, and at additional offices.
Postmaster: Send change of address to *Woodsmith*, Box 37106, Boone, IA 50037-0106.
Printed in U.S.A.

WoodsmithCustomerService.com

ONLINE SUBSCRIBER SERVICES

- **VIEW** your account information
- **RENEW** your subscription
- **CHECK** on a subscription payment
- **PAY** your bill
- **CHANGE** your mailing or e-mail address
- **VIEW/RENEW** your gift subscriptions
- **TELL US** if you've missed an issue

CUSTOMER SERVICE Phone: 800-333-5075 weekdays

SUBSCRIPTIONS
Customer Service
P.O. Box 842
Des Moines, IA 50304-9961
subscriptions@augusthome.com

EDITORIAL
Woodsmith Magazine
2200 Grand Avenue
Des Moines, IA 50312
woodsmith@woodsmith.com

ACTIVE INTEREST MEDIA

CHAIRMAN **Effrem Zimbalist III**
PRESIDENT & CEO **Andrew W. Clurman**
EXECUTIVE VICE PRESIDENT & CHIEF FINANCIAL OFFICER **Brian J. Sellstrom**
EXECUTIVE VICE PRESIDENT, OPERATIONS **Patricia B. Fox**

from the editor

Sawdust

As summer begins turning to fall, my thoughts shift from outdoor activities to those inside — like spending more time in my shop. This yearly change provides another opportunity to reinvent my shop, by looking for ways to improve it just a little bit more. I'll take a look at things like storage, my tools, and where everything is positioned in an effort to get the most out of the time I spend there. Unfortunately, quite a bit of that effort ends up being a trial-and-error process to get things just right.

ONE-WALL WORKSHOP. To help you avoid some of that frustration when you're starting out (or even wanting to add to your shop), check out the one-wall workshop that begins on page 26. It has everything necessary to complete a wide range of woodworking projects. In this issue, we're starting out with the "bones" of any shop — a workbench, a combination miter saw center and auxiliary workstation, and easy-to-build wall-mounted storage cabinets.

Then in the next issue, we'll finish things off by adding some really handy roll-around carts that store neatly under the workbench and workstation. One is a must-have assembly center that makes working on any project a snap. And the other two carts provide homes for your thickness planer and router. All in all, this one-wall workshop has everything you need, right where it's needed.

THERE'S MORE. Already have the workshop of your dreams? Then check out the other projects in this issue. I know I'll be starting on the puzzle box on page 20 pretty soon. I've always been fascinated by this type of box. It features unique design elements that keep all the parts together. Yet they still allow things to move just enough — and in the right order — to open up the box and remove the lid. I plan to make several as gifts this year.

Another project that I and many other woodworkers have on our project lists is a wall clock. But the challenge of designing a clock around a purchased clock movement intimidates a lot of us. Well, if that's been the case for you as well, you can relax. Just turn to page 44 to take a look at our heirloom wall clock. It has a classic look that will fit in great anywhere. Plus, the etched design in the glass door offers a new technique to try out.

Finally, if you, a family member, or a friend enjoy playing music, take a look at the stand on page 36. It's the perfect project for letting everyone know that in your world, both woodworking and music are serious business.

Bryan

contents

No. 226 August/September 2016

Projects

weekend project

Puzzle Boxes 20

Boxes are always a popular project, but this one has its own unique challenge — a specific sequence of moves is required to unlock it and access the contents inside.

shop project

One-Wall Workshop 26

Everything you need to build woodworking projects is designed into a workshop that fits along a single wall. Tuck-under carts provide versatility and a compact footprint.

designer project

Music Stand. 36

Do you have a future rock star or budding maestro in your family? This elegant music stand is the perfect accessory to help them build their musical talents.

heirloom project

Walnut Wall Clock 44

We all hope to find the "time" to build a clock someday. This version features an arched top, a decorative glass panel door, and great woodworking techniques.

Departments

from our readers
Tips & Techniques 5

all about
Choosing Clock Components. . . . 10

router workshop
Backrouting for Clean Cuts 12

great gear
Tools Made in America 14

woodworking technique
Better Results with MDF 18

woodworking technique
Custom Details with Bevels 54

working with tools
Top-Notch Mortising 56

in the shop
Sharpening Drill Bits 58

woodworking essentials
Shop-Made Edge Guides 60

mastering the table saw
Smooth, Accurate Tenons 62

tips from our shop
Shop Notes. 64

from our readers

Tips & Techniques

"Smart" Box Joint Jig Helper

Making box joints at the table saw calls for the use of a specialized box joint jig that often has a tall auxiliary fence to support the workpiece. The problem with having a tall fence is that it requires you to bend over the table saw after every pass, straining your neck and back to see the workpiece and index it over the key. This can really take its toll on your comfort when you're making multiple box joints.

To avoid this situation, I decided to let technology help me out by using my smartphone's camera to aid in positioning my workpiece. But I couldn't just set my phone on the table saw without some kind of support. So I made the cradle shown here to hold the phone.

SIMPLE BUILD. The cradle consists of a piece of plywood sandwiched between two pieces of hardboard and glued together. A couple of rare-earth magnets epoxied into holes in the bottom hold it in place. My phone is also in a protective case, so I sized the cradle accordingly.

Min-Hao Kuo
East Lansing, MI

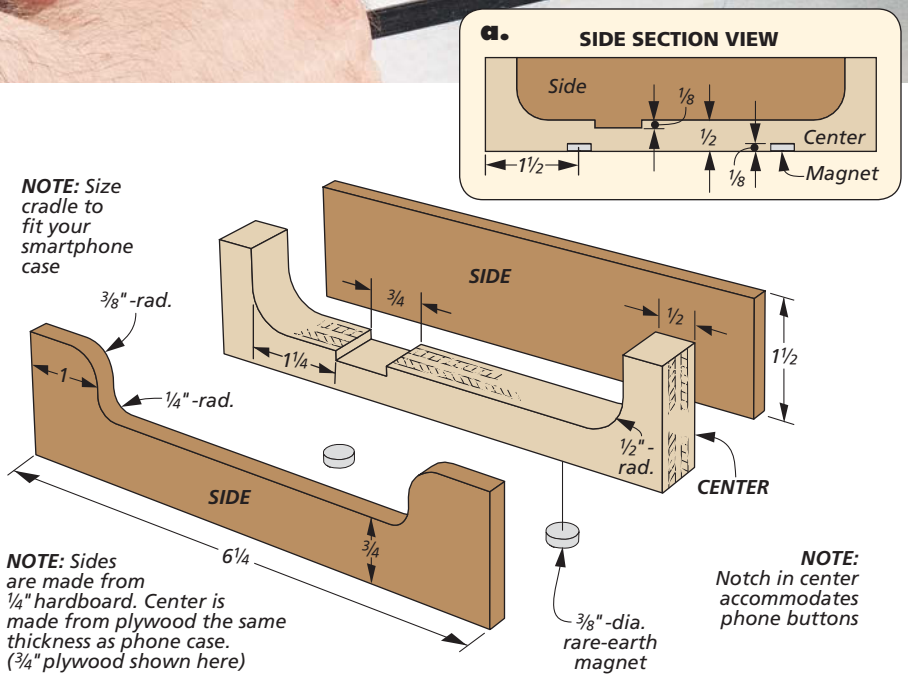

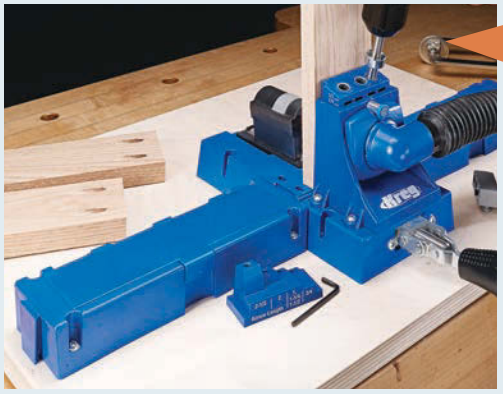

Win This Kreg K5 Jig

Simply send us your favorite shop tips. If your tip or technique is selected as the featured reader's tip, you'll win a *Kreg K5 Jig* just like the one shown here. To submit your tip or technique, just go online to *Woodsmith.com* and click on the link, "SUBMIT A TIP." There you can submit your tip and upload your photos for consideration.

The Winner!

Congratulations to Thomas Little, the winner of this *Kreg K5 Jig*. To find out how you can win this jig, check out the information at left.

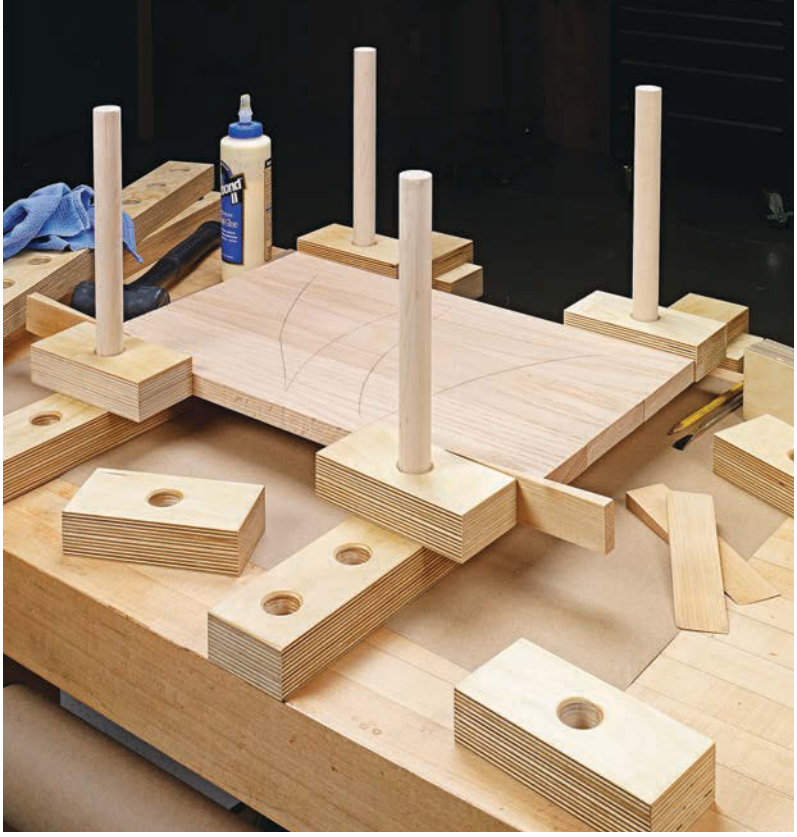

▲ A dowel recessed in one end of a base frame, and a cleat at the other end, hold them steady during use.

▲ Making multiple frames allows you to stack them vertically. The hardwood wedges secure the panels.

Panel Assembly System

For many projects, I find myself gluing up narrow boards to create wider panels. But because of the small size of my workshop, it seems that I always run out of worksurfaces after only a couple of panels are glued up and clamped.

Instead of spreading my work out, I devised this panel assembly system that fits on my workbench and allows me to work up. This system employs a series of wedges, clamp blocks, and dowels, as you can see in the main photo above.

HOW IT WORKS. These parts work in conjunction with some adjustable frames. The frames are sized to fit across my workbench. They have evenly spaced holes along their length to hold the dowels. A dowel glued to the underside of one end fits into a doghole in my bench, while the other end has a cleat that butts up against the edge of the workbench (upper right photo). This cleat keeps the frames from moving as I glue up the panels.

This panel clamping system can be customized to fit just about any size workbench that has dogholes in the surface. The best part is, you can make as many frame pieces and clamping blocks as you'd like. This allows you to "stack" your panel assemblies vertically, as shown in the lower right photo above. So even in a small shop, you'll rarely run out of worksurface space, even when working on projects with multiple panel glueups.

Thomas Little
Rocky Mountain House, Alberta

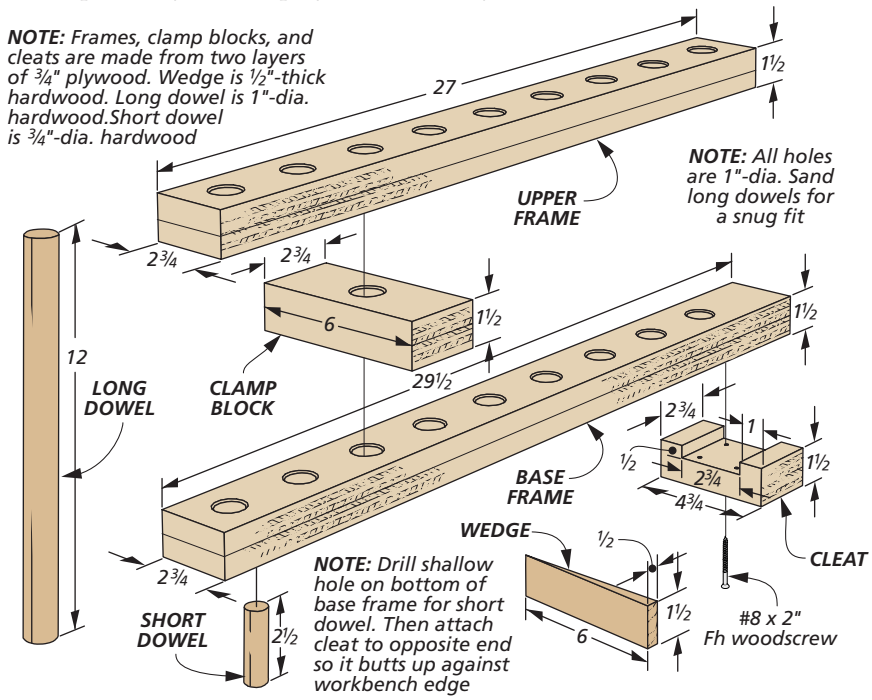

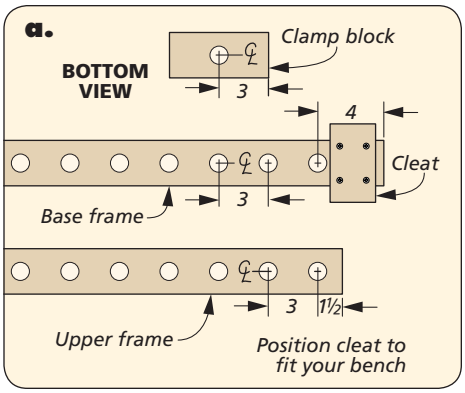

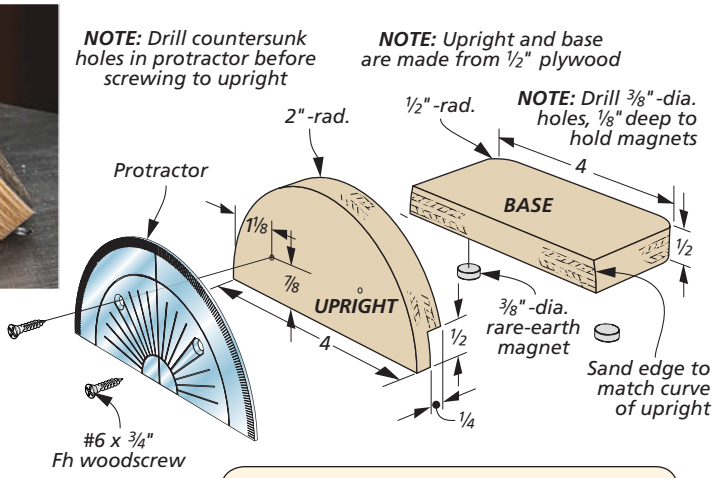

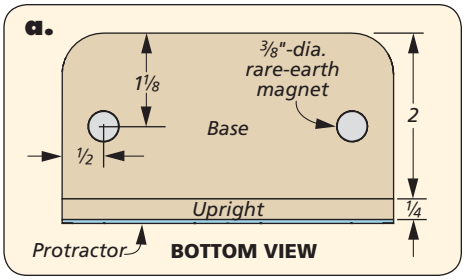

Band Saw Table Gauge

Trying to tilt the table on a band saw using the gauge underneath the table can be challenging to say the least. And holding a triangle or bevel gauge on the table surface while simultaneously tightening the table knobs is not much easier. So I designed the tilt gauge shown above using an inexpensive drafting protractor from an office supply store.

This gauge is simply two pieces of plywood rabbeted to fit together at 90°. I shaped the upright piece to match the curve of the protractor before attaching it with screws. A couple of rare-earth magnets epoxied into the base piece keep my hands free to tighten the table knobs.

Robert Reiche
Birmingham, Alabama

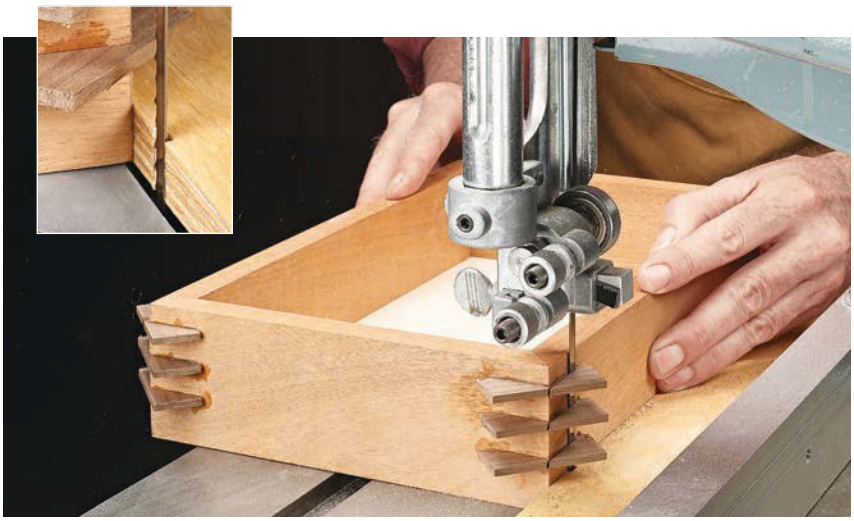

Easy Spline Trimming

Recently I made ten keepsake boxes that featured mitered corners reinforced with decorative splines. Normally I would reach for a hand saw to trim the splines flush with the sides of the box. But the prospect of trimming 120 splines sent me searching for a quicker method. The solution I arrived at was a simple "notched" fence to slightly recess my band saw blade.

The fence should be low enough to fit under the lowest spline. In my case, a scrap piece of plywood worked perfectly. Make the notch wide enough to accommodate the width of the band saw blade (inset photo). Then clamp the fence to the table and trim the splines nearly flush before sanding them smooth.

Calvin Deobald
Gull Lake, Saskatchewan

DIGITAL WOODSMITH

SUBMIT TIPS ONLINE

If you have an original shop tip, we would like to hear from you and consider publishing your tip in one or more of our publications. Jump online and go to:

Woodsmith.com
and click on the link,
"SUBMIT A TIP"

You'll be able to tell us all about your tip and upload your photos and drawings. You can also mail your tips to "Woodsmith Tips" at the editorial address shown on page 2. We will pay up to $200 if we publish your tip.

RECEIVE FREE ETIPS BY EMAIL

Now you can have the best time-saving secrets, solutions, and techniques sent directly to your email inbox. Just go to:

Woodsmith.com
and click on,
"Woodsmith Tips"

You'll receive one of our favorite tips by email each and every week.

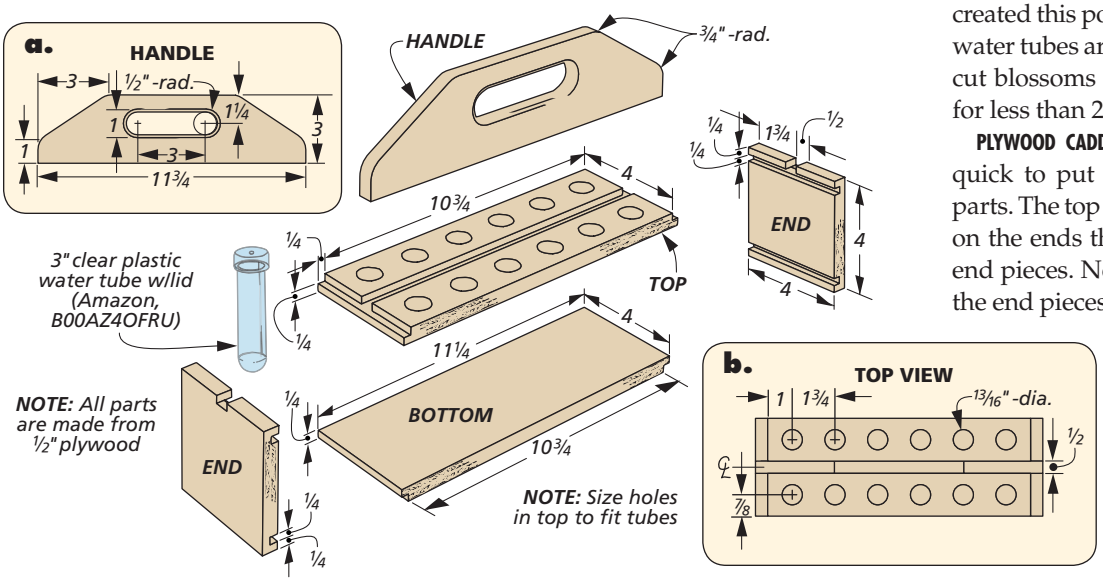

Small Parts Storage Caddy

Keeping track of small hardware bits and pieces is always a challenge. It seems that no matter how well the original packaging is resealed, they'll inevitably break open in drawers and cubbies. The contents will be scattered about, or worse, lost forever in the abyss.

To better contain my tiny hardware parts, I reused some inexpensive plastic water tubes that I had lying around and created this portable storage caddy. The water tubes are commonly used to hold cut blossoms and are readily available for less than 20 cents each.

PLYWOOD CADDY. The storage caddy is quick to put together using plywood parts. The top and bottom have tongues on the ends that fit into dadoes on the end pieces. Notches on the top edge of the end pieces, as well as a long groove on the top, house a carry handle (detail 'a'). The holes for the water tubes should be sized to fit the tubes you have available.

Sue Brunclik
Milwaukee, Wisconsin

QUICK TIPS

Clean Clamping Cauls. *Dan Martin* of *Galena, Ohio,* often uses clamping cauls when gluing up boards into panels. Instead of tearing off fresh pieces of waxed paper to protect his cauls from glue, he keeps his cauls wrapped in plastic wrapping film so they're always at the ready.

Inexpensive Corner Clamps. *Donald Bass* of *Arlington, Texas,* often needs to hold small project parts together at 90° for gluing or nailing. Since most commercially available assembly squares were too big for the job, he found that paper binder clips and metal angle brackets work just as well.

Miter Gauge Fence Support

Sometimes I need to crosscut wide boards or panels on my table saw. The problem with this operation is that the auxiliary fence on my miter gauge has a tendency to sag at one end and catch on the front corner of my table saw as it passes over the edge. To help support the fence on my miter gauge and make these cuts safely, I made the support bracket shown here.

EASY CONSTRUCTION. This support bracket is simple to make from a few pieces of plywood. The two side pieces have cutouts that are sized to slip over the rip fence guide rail. A couple rabbets along the upper edge of the sides provide a space for the top to be glued in place. I also epoxied a rare-earth magnet into a hole on the underside of the top to hold the bracket in position on the guide rail. Now, when I crosscut panels, my auxiliary fence is fully supported.

Tom Phillips
Dripping Springs, Texas

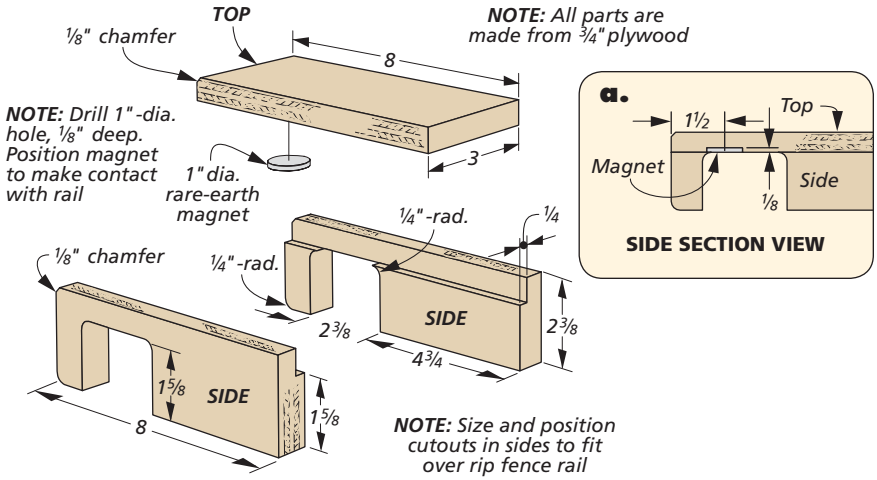

Shop-Made Band Clamps. While assembling some small boxes in his shop one day, *Shane Burk* of *Lubbock, Texas,* ran out of band clamps. He improvised by cutting the hooks off of an inexpensive tie-down strap. He reattached the loose end by tying it to the ratchet housing.

Handy Glue Pot. *Robert Lindberg* of *Swanzey, New Hampshire,* couldn't justify the expense of buying a dedicated glue bowl. He found that plastic chewing gum containers work perfectly for holding glue. They'll even keep the glue fresh for several days when closed.

all about

choosing Clock Components

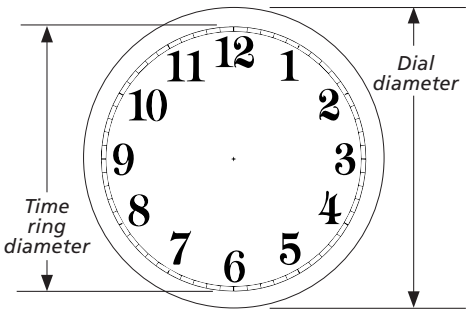

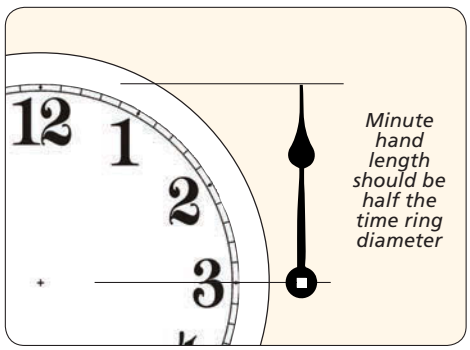

Building a handcrafted clock is a popular project for many woodworkers. But if you've never made one before, all the choices for movements, dials, hands, and other parts can get a little confusing. Over the years, I've developed a few tricks for honing in on the parts I need. Here are some of the things I keep in mind when planning a new clock.

FOCUS ON THE CLOCK TYPE. As you get started, it's best to get a sense of what kind of clock you want. Your concept may evolve in several different ways. For some, you may have a general idea for the type of clock you like and find components that work for it. Other times, the components you find serve as the inspiration for the design of the clock.

When looking at parts, you'll notice that some sellers offer all-in-one kits that give you everything you need for your clock in one package. (You can find a list of suppliers I often use on page 67.) If one of these kits strikes your interest, then the work will be done for you. Other times, though, you may need to mix and match to find just what you need.

MATCHING THE MOVEMENT. One consideration to make early on is whether you want to use a battery-powered quartz movement or a wind-up mechanical movement. These two types of movements often require distinct dials and other components. The type of movement you choose — quartz or mechanical — will set you down the path for choosing the other appropriate parts for your clock.

QUARTZ MOVEMENTS. Quartz movements have become the standard for modern clock-building. They're powered by a battery and use the oscillations of a quartz crystal to keep the time. If you want to add a pendulum or a chime to your clock, there are even quartz movements available with these features. The clock featured in the main photo above and on page 44 is one example.

A mechanical movement adds traditional charm to a clock, but the movements are typically quite expensive.

A variety of quartz movements are available to power any shape or size of clock that you want to build.

A variation on the standard quartz movement is an atomic movement. These quartz movements are radio-controlled to synchronize frequently with a master atomic clock.

MECHANICAL MOVEMENTS. If authenticity is what you're after, a mechanical movement is the right choice (left photos above). You can't beat the heirloom look of a clock made with a mechanical movement, but you can expect to pay $200 or more to get one.

THE RIGHT SIZE OF MOVEMENT. With both quartz and mechanical movements, different types are needed to power different lengths of hands, as well as pendulums. Fortunately, most suppliers are helpful about specifying what sizes of components can be used with specific movements. For example, standard quartz movements typically only power hands up to 7" long. For longer hands, you'll need a "high-torque" movement.

DIAL DECISIONS. Once you've decided on the kind of clock and the type of movement that you want, I suggest focusing on the most visible part of your clock, the dial, next. The dial is an important consideration because its size impacts a lot of other elements of the clock's design, such as the clock's overall size, the length of the hands, and the strength of the movement you'll need to power the hands. You can also make your own clock dial, as with the clock in the inset photo, above right.

As you begin your search, you'll notice that the dials you use with mechanical movements are different than those for quartz movements. This is because the mechanical movement's winding mechanism is often accessed through holes in the face of the dial.

It's also important to be aware of certain dial terminology, and how it will affect the dimensions of your project. The "dial diameter," for example, is the overall diameter of the entire dial, while the "time ring diameter" is the diameter of the ring with the numbers (refer to the drawings on the previous page).

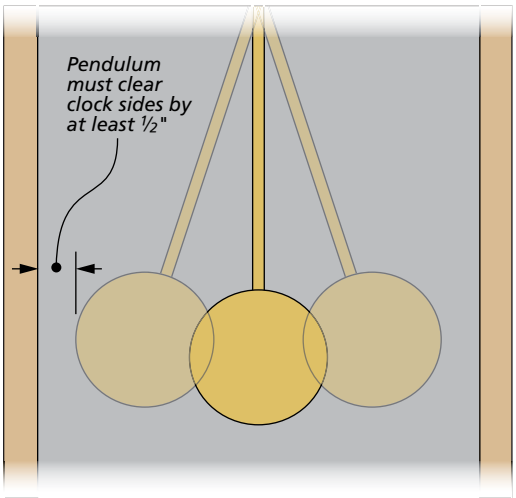

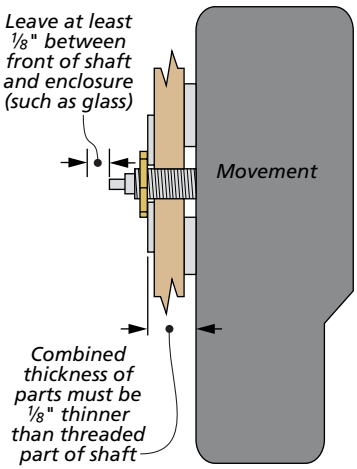

ADD HANDS. When you pick a dial, you'll often be given a recommendation for the proper hands to go along with it. But if you're not, it's pretty easy to determine the size of hands that you need. In a nutshell, you want a minute hand with a length equal to half the time ring diameter of your dial (drawing, previous page). The shorter hour hand is always sold along with the minute hand. As far as the style of hands goes, you'll find everything from ornate "serpentine" hands to simple streamlined ones.

PUT IT ALL TOGETHER. With the parts selected, it's important that the proportions of the clock you have in mind will allow for everything to go together cleanly. Of course, part of this equation comes down to the basics of measuring your parts and making sure you have enough space for the dial, the movement, and other components. But there are some other considerations, such as making sure there's enough space for the pendulum to move back and forth, as well as clearance for the movement shaft, as shown in the drawings at left.

With the wide variety of clock components available, you're sure to find a combination to make your project a success. The key is a careful, measured approach to the project to ensure that you get exactly what you need. W

the right time for Backrouting

If you're familiar with using a hand-held router, then you know that you typically rout along an edge from left to right. This direction of movement means that you're routing against the rotation of the bit, which will pull the spinning router bit into the workpiece for a more controlled and stable cut.

Along these same lines, you're also often told that "backrouting," or routing in the opposite direction, is a bad idea. And while this is usually the case, as you try more techniques in woodworking you'll find there are times when backrouting can be helpful for achieving good results. The key is knowing how to do it properly.

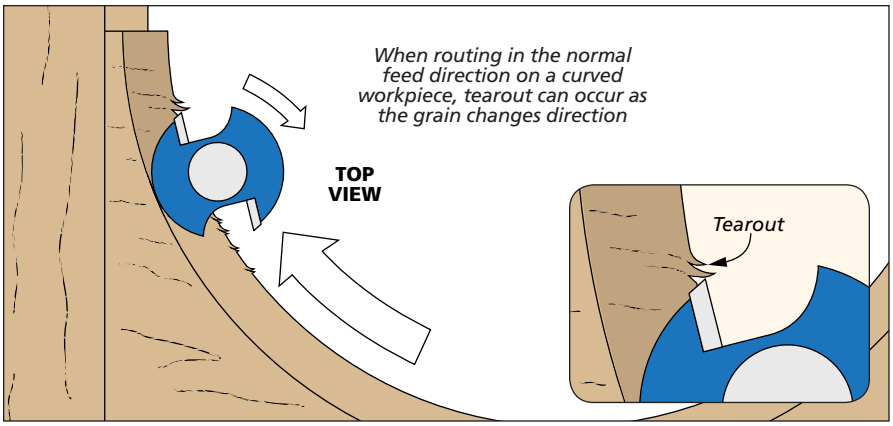

WHY BACKROUT? Backrouting is primarily a useful technique in situations where tearout is a concern. For example, when you're routing with a hand-held router along an edge, such as with a rabbeting bit, the bit is rotating in a manner so that the cutters are exiting through unsupported wood fibers. This can lead to tearout, especially when routing a curved edge where the grain changes direction as you move along the surface. The drawings above show an example of this.

If you backrout this edge, however, the cutters are rotating into supported

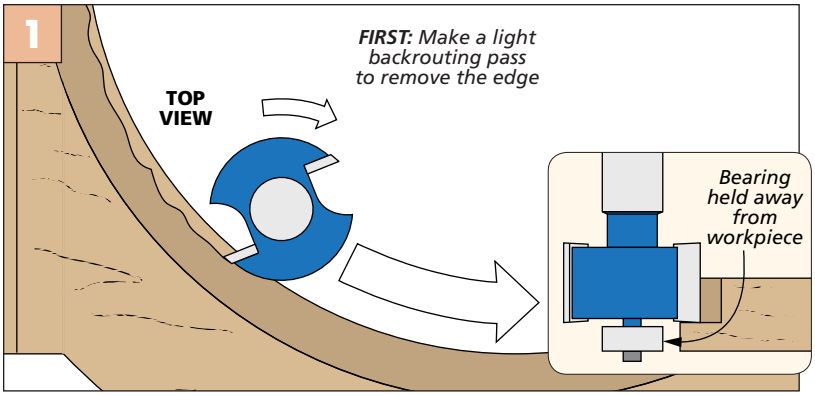

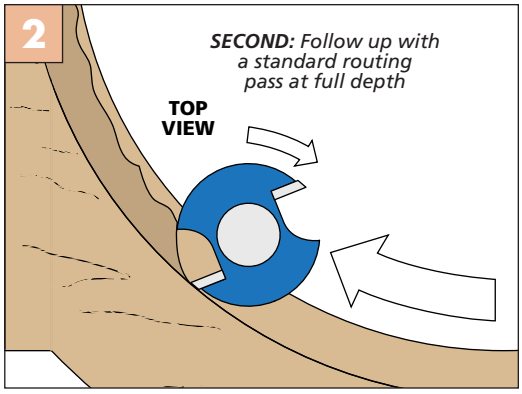

wood fibers. After they cut through these wood fibers, they exit the cut in the space where the fibers have been removed (refer to the upper left drawings).

▲ Before routing half-blind dovetails with a dovetail jig, a light backrouting "skim pass" can reduce the chance of tearout.

This change in direction helps to minimize tearout along the routed edge.

HOW TO DO IT. The main concern with backrouting is that the rotation of the router bit tends to push it away from the workpiece. This makes the router more difficult to control. It can also be a safety concern, as the bit tends to grab and skip along the surface.

Because of this, I recommend backrouting only "problem" areas, such as hand-held routing along curved edges. In fact, you probably only need to backrout the area in Figure 1 where you'd be moving "uphill" if routing in a normal direction. But it's okay if you continue past the centerpoint a short distance.

In addition, you'll want to backrout using a light cutting pass in order to establish a tearout-free shoulder. By removing less material, you will reduce the grabbing and skipping effects that backrouting can have on your router control. Then you can follow up with a full-depth pass by routing in the correct direction to complete the cut, as shown in Figure 2 above.

WHEN TO DO IT. Along with curved edges, there are some other times when backrouting can be helpful. When using a dovetail jig, for example, the dovetail bit can cause tearout along the face of the tail board when making a full-depth cut. That's why it's a good idea to backrout a skim pass along the face of the board first, as shown in the photo at left. There are even a few instances where I'll employ a backrouting technique at the router table (box below).

HANDY IN A PINCH. While it's certainly not a technique I use all the time, backrouting does have its place. The secret is knowing when to use it to improve your work and how to do it correctly. W

How-To: BACKROUTING ON THE ROUTER TABLE

Backrouting at the router table is usually frowned upon, as well, but I've had a few instances where it's been helpful. One reason for doing it is if you need matching stopped grooves or dadoes on parts. This presents a situation where resetting the router table fence between cuts would hurt your chances of getting the grooves to match up with one another (photos at right).

There's a tendency for the bit to push the piece away from the fence when backrouting, so take very light passes (1/8" deep or less) and maintain firm pressure against the fence.

▲ For matching stopped slots in mating case sides, start by routing the first stopped slot in the usual fashion.

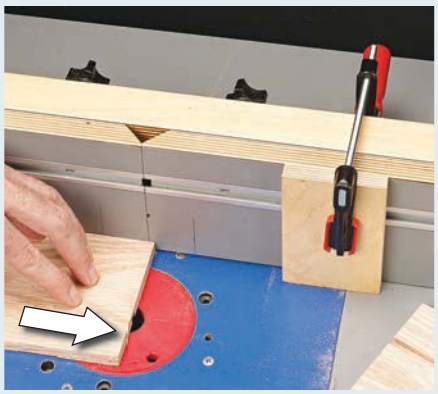

▲ As long as it's a very light cut, you can rout the mating stopped slot with a backrouting pass from the other direction.

Forrest Woodworker II (forrestblades.com)

GRR-Ripper (microjig.com)

great tools still Made in America

In *Woodsmith* No. 224, we featured an article on some of our favorite tools from discount tool store chain *Harbor Freight*. We received a lot of letters and emails about that article, most of them positive. But there was one email that stood out. It came from a former steel worker who had lost his job due to competition from overseas. He was upset that all of the tools featured in that article were made overseas, and he wanted to know why we didn't discuss any U.S.-made tools.

To be honest, most of us here struggled at first to come up with more than a couple examples. But after giving it a little more thought and doing a bit of research on the subject, we were pleasantly surprised to discover that not only are there a number of American tool manufacturers alive and well, but they happen to make some of our favorite and most-used tools. We actually had to whittle down our initial list in order to fit (refer to page 67 for sources).

To make the cut, each tool had to meet a few requirements. First, it had to be manufactured not just in North America, but in the United States (sorry, *Veritas*). Although a couple of the items shown here may contain some imported parts, everything on the list is subtantially or entirely made in America.

Like the *Harbor Freight* article, we also tried to keep this list confined to items under $100. And finally, we selected items that we actually use on a regular basis here in our own shops.

One final note. We intentionally left out tools that are more or less handmade by individual craftsmen or small, "boutique" toolmakers. We hope to cover those in a separate article in the future.

[1] Forrest Saw Blades

There are a number of quality saw blade manufacturers today. But I've owned a *Forrest Woodworker II* (photo above) all-purpose blade for a number of years now and about the only time I take it off my table saw is to install a dado blade (also a *Forrest*). *Forrest* is a family-owned company in Clifton, New Jersey.

[2] MicroJig GRR-Ripper

To call the *GRR-Ripper* (photo above) just a push block is a little like calling the *Queen Mary* just a boat. Yes, it serves the same primary function as most other push blocks. But it has a number of adjustable features that make it much more versatile than your garden-variety push block. The *GRR-Ripper* is made by *MicroJig*. The company is based out of Winter Springs, Florida.

[3] Microplane Rasps

Although they look a little like something a waiter would use to grate parmesan cheese onto your salad, these *MicroPlane* rasps (shown at right) have become the go-to shaping tool in our shop. They chew through wood like a beaver on steroids and yet leave a relatively smooth surface that's ready for sanding. They're available in a variety of sizes and profiles.

Microplane rasps (microplane.com)

[4] Starrett Combination Square

The combination square was invented in 1880 by Laroy S. Starrett. And the company bearing his name is still making them today in Athol, Massachusetts. The *Starrett* brand is legendary among machinists and toolmakers for the quality of its products and their 12" combination square is no exception. As you can see in the lower left photo, mine gets used on nearly every project I make. You can find less expensive squares on the market, but you'll be hard-pressed to find a better one.

[5] Preppin' Weapon

Made by *Time Shaver Tools*, of Orange, California, the *Preppin' Weapon* sanding block was originally developed for the auto body repair industry. But it's become a favorite of a lot of woodworkers, as well. Designed to hold a quarter-sheet of sandpaper, it's easy and comfortable to use (center photo below).

[6] Wood Handscrews

There's definitely an "old-school" vibe to wood handscrews. But for certain clamping tasks, they're indispensable. Unfortunately, one of the original makers of this style of clamp, The *Adjustable Clamp Company*, of Chicago, Illinois, recently shuttered its operation after 113 years in business. However, the *Dubuque Clamp Works* still makes this traditional style of wood clamp (photo at right) in their Dubuque, Iowa factory. This small, family-owned operation doesn't have its own website, but you can purchase their products through some of the sources listed on page 67.

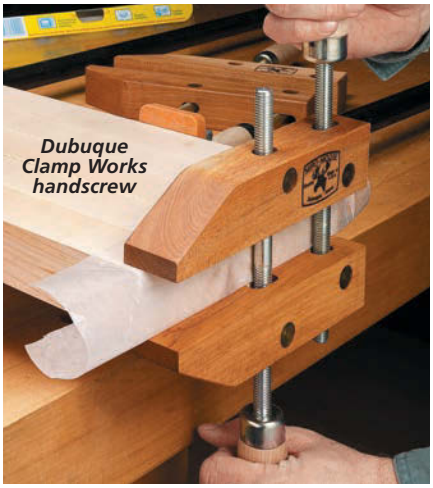

Dubuque Clamp Works handscrew

[7] Wood is Good Mallet

As far as tools go, a mallet is probably one of the most basic. But not all mallets are created equal. The *Wood is Good* mallet (lower right photo) combines a comfortable, solid hardwood handle with a shock-absorbing urethane head.

Although it was designed as a carver's mallet, this has become the most-used mallet in my shop. The round head design makes it easier to orient the mallet to your chisel or carving tool than a traditional square-headed joiner's style.

A word of caution though. You may come across some imported knock-off versions of this mallet that look similar. But the overall quality just isn't the same as the genuine article.

Starrett combination square (starrett.com)

Preppin' Weapon (timeshavers.com)

Wood is Good urethane mallet (woodisgoodco.com)

Whiteside bits (whitesiderouterbits.com)

Diamond plates (eze-lap.com and dmtsharp.com)

[8] Whiteside Router Bits

As with saw blades, there are a number of well-known router bit manufacturers to choose from. But one brand that consistently appears at the top of most tool reviews is *Whiteside*. Based in the middle of the North Carolina furniture manufacturing region, *Whiteside Machine* has been making quality carbide router bits since 1970.

I like these bits because the grinding is excellent and they seem to stay sharp longer than other brands I've used. *Whiteside* offers a complete line of bits in dozens of profiles. You can buy them individually or in sets (photo above).

[9] Kreg Pocket Screw Jigs

I have to admit that the first time I saw a *Kreg* pocket screw jig (lower left photo), I thought it was just another gimmick that wouldn't be around for long. But once I had a chance to actually use one, I quickly became a convert. Woodworking purists may cringe, but for assembling face frames and simple cabinets, it's hard to beat this jig for speed and efficiency.

Over the years, *Kreg Tool* has continued to improve upon their original pocket screw jig and today they offer several different models, as well as clamps, screws, and accessories to go along with them. Their factory is located in the town of Huxley, Iowa.

[10] Diamond Plates

I use a variety of sharpening stones and equipment in my shop. But for longevity and ease of use, it's hard to beat diamond plates. Each plate is embedded with long-wearing diamond particles that sharpen quickly. And best of all, diamond plates don't require flattening (like waterstones) or use messy oil (like oilstones). You can find them in large sizes (shown above) for honing chisels or plane irons as well as smaller "paddles" for touching up router bits and other small tools.

And when it comes to diamond plates, you have two different U.S. manufacturers to choose from: *EZE-Lap* in Carson City, Nevada and *DMT Sharpening*, in Middleton, Wisconsin.

[11] Finishing Products

Wood finishing products, such as stains and top coats, are one product category where there are a number of domestic manufacturers to choose from. For years now, we've used both *General Finishes* (East Troy, Wisconsin) and *Old Masters* (Orange City, Iowa) products on many of the projects featured in *Woodsmith*. For outdoor projects, *Penofin* (Ukiah, California) penetrating stains are usually our first choice.

Kreg pocket screw jig (kregtool.com)

Stains and finishes (generalfinishes.com, penofin.com, and myoldmasters.com)

Fuller drill bits (wlfuller.com)

Weldon countersinks (heritagecutter.com)

Vix bits (vixbitsonline.com)

[12] Fuller Tapered Drill Bits

Before I discovered these bits, drilling a pilot hole, shank hole, and countersink would require three separate steps. *Fuller* tapered countersink bits do it all in one operation. The tapered shape of the bit creates clearance for both the shank and the tip of the screw. And they even have an adjustable stop to control the countersink depth. They're made in Warwick, Rhode Island.

[13] Weldon Countersinks

If you've ever used a fluted countersink bit, you've probably also experienced the chatter and out-of-round hole that is often the result. If so, then you'll appreciate *Weldon* zero-flute countersinks. Instead of cutting flutes, these bits have an angled hole running through the bit. The sharp edge of the hole shears away the material, leaving a smooth, chatter-free countersink. *Weldon* countersinks work well in wood, metal, or plastic. Manufactured in Millersburg, Pennsylvania, they're available in a variety of sizes and countersink angles.

[14] Vix Bits

Invented in 1958 by Sam Vick, a carpenter and home contractor, *Vix-Bits* are self-centering drill bits that allow you to drill a perfectly centered hole when installing hinges or other hardware. Manufactered in Lakeville, Minnesota, they feature a spring-loaded housing that automatically centers the drill bit on the existing mounting holes of the hardware you are using. W

American Innovators: MORE USA TOOLS

Shown here are tools from a few manufacturers that weren't included in the list above. The reason for this is that these companies each make such a wide range of items that it was nearly impossible to choose just one. Texas company *Incra Tools* makes an extensive line of table saw and router table jigs and accessories, as well as specialty rules and layout tools. *Woodpeckers* produces a line of measuring, marking, and layout tools in their Ohio factory. *Lie-Nielsen*, in Maine, is famous for its top-quality hand planes, saws, chisels, and other hand tools. And *WoodHaven*, of Iowa, is known for its router jigs and accessories. We don't think you'll be disappointed in any of the products offered by these American companies.

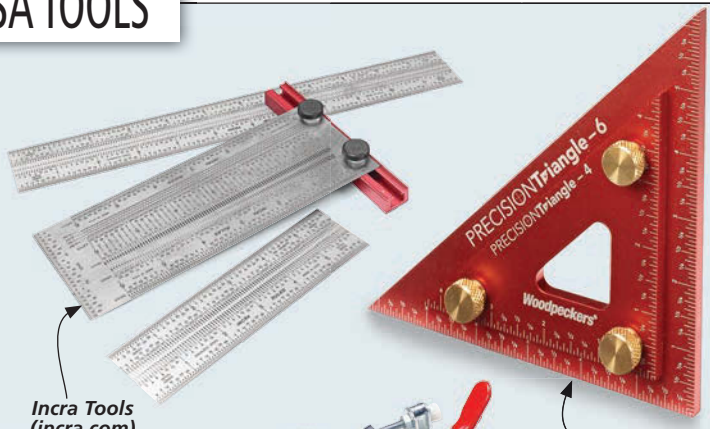

Incra Tools (incra.com)

Woodpeckers (woodpeck.com)

Lie-Nielsen Toolworks (lie-nielsen.com)

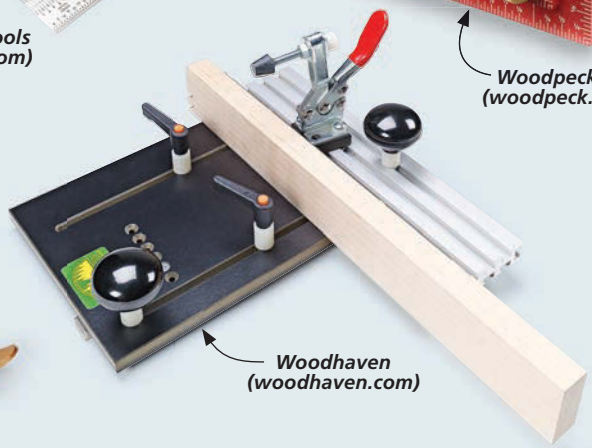
Woodhaven (woodhaven.com)

better results with MDF

As a material, medium density fiberboard (MDF) has a lot going for it. The sheets are flat, smooth, stable, and reasonably priced. I've built all kinds of jigs, storage projects, carts, and even benchtops from MDF. While MDF has a lot to offer, taking advantage of the material's strengths requires some understanding of its characteristics and limitations. Let's look at how this plays out in common shop practices.

HANDLING. In the shop, you want to handle MDF sheets in a way that preserves their flat, smooth faces. Though the faces are surprisingly tough, the edges are subject to dings and damage from moisture. As a result, I try to buy MDF only as it's needed. The lower left photo shows how to best store panels.

CLEAN CUTS. MDF is heavy, so I prefer to break down the sheets into more manageable pieces as soon as possible. A good method of doing this is with a circular saw and cutting guide like the one shown on page 60. These smaller pieces are much easier to trim to final size at

▲ Raising sheets off the floor prevents moisture from wicking up. To keep panels flat, support them against thick boards.

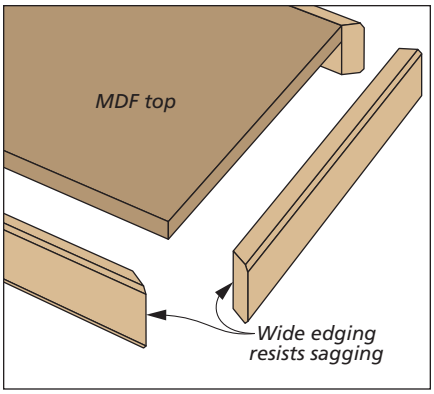

Wide Edging. Solid-wood strips add stiffness to MDF panels. The edging also protects and conceals the edges.

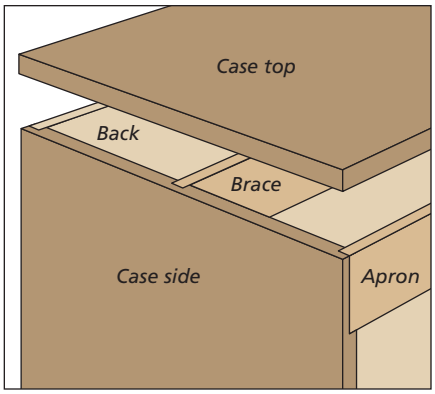

Apron & Braces. Wide aprons, braces, and the back keep case tops from developing a sag over time.

▲ The edges of MDF easily absorb glue. Wait a few minutes and apply a second bead of glue to get a strong bond.

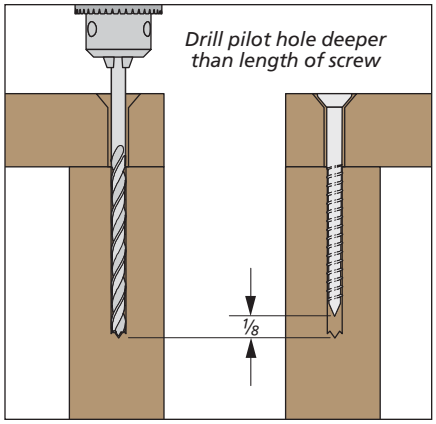

Pilot Holes & Fasteners. To create a secure connection, use long screws. Drill deep pilot holes to prevent splits.

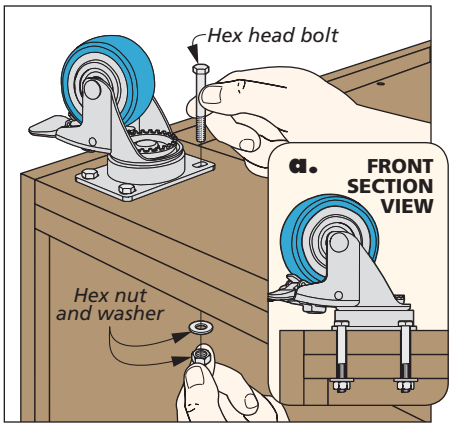

Through Bolts. Attaching casters with bolts, washers, and nuts eliminates the risk of stripping out screw holes.

the table saw, as you can see in the main photo on the previous page. The good news is MDF cuts very easily with little resistance to an ordinary combination blade or a router bit.

What isn't good is the cloud of fine dust that's created. So a smart strategy for dust collection is important. The best is corralling dust at the source with a dust collector or shop vacuum. A second line of defense is to wear a respirator and use an air cleaner. During nice weather, I like to break down sheets on the driveway to limit the dust that ends up in the shop.

DESIGN. It's tempting to treat MDF like plywood when designing projects. However, since MDF is composed of fine wood fibers, the panels aren't as rigid as plywood. In case pieces, including a horizontal divider or a ¾" MDF back strengthens the overall assembly.

To prevent cabinet tops and shelves from sagging, one solution is to glue up the panels from two layers of MDF. The drawings on the bottom of the previous page highlight two other methods.

STRAIGHTFORWARD JOINERY. The structure of MDF calls for simple joinery, like dadoes and grooves. When sizing the joints, you want to aim for a slightly looser fit than you would use for solid wood or plywood.

The reason for this is once you add glue to the joint, the workpiece can swell enough to prevent the parts from coming together. Speaking of applying glue, take a look at the upper left photo to learn how to ensure a solid glue joint.

FASTENER TIPS. Woodscrews are a great way to beef up joints in MDF projects. I've found that long screws are necessary to create a better hold when driving into the edge of a workpiece. The trick is to avoid splitting the workpiece when driving the screws. The upper middle drawing offers a straigthforward solution.

INSTALLING HARDWARE. When it comes to installing hardware, drilling the right size pilot hole goes a long way toward making a secure connection. However, for hardware that needs to stand up to more stress (like casters), you may want to consider skipping screws, as shown in the upper right drawing.

FINISH & PAINT. Finishing MDF presents a unique situation. The smooth surface of the faces translates to an easy job. For the tops of shop projects, I prefer to apply a couple coats of wiping varnish. For other parts, paint works really well.

What can trip you up are the porous edges that leave a different surface. The solution is to seal and fill the edges so the final texture is the same as the faces.

There are several effective approaches to filling and sealing the edges such as diluted glue, gel varnish, and drywall spackle (far left photo). The key is to completely seal the edge, then sand it smooth. After a coat of primer, you can roll on two coats of paint for a crisp look, as shown in the near left photo.

MDF may not be ideal in every situation. However, if you keep these tips and techniques in mind, building great-looking and long-lasting projects out of MDF is within your reach. W

How-To: SEALING & PAINTING MDF

Seal Edges. A thin coat of drywall spackle fills the edges of MDF parts to create an even surface.

Prime & Paint. After sanding and priming, use a roller to apply an even coat of paint for a top-notch look.

Weekend Project

Clever Puzzle Boxes

Your own ingenuity is the key to creating and opening these attractive boxes.

Hardwoods from left to right: wenge, sapele, and redheart.

Japanese puzzle boxes have been around for over 100 years. They're opened by following a sequence of "moves" to reveal the hidden treasures stored inside. And while the design featured here is fairly simple (only five moves), building one of these creative little boxes is sure to be a test of your woodworking skills, as well as your attention to detail.

WOOD SELECTION. You'll notice as you look over this plan that it doesn't require a large amount of lumber to build one box. That makes it the perfect project for using an exotic species that you've been saving for a special project.

Our designer, Chris Fitch, couldn't decide on one wood that he liked the best, so he decided to build several puzzle boxes, as you can see above. Just one cautionary note before starting: The boxes have very tight tolerances and require parts to slide in grooves and against one another. For that reason,

How-To: SHAPE THE TOP & BOTTOM

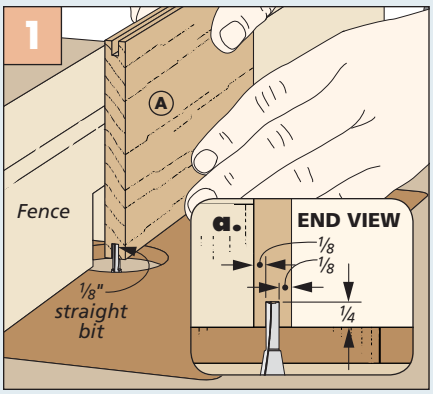

Grooves First. Rout a groove along the edges of the top and bottom, as well as one end of the top.

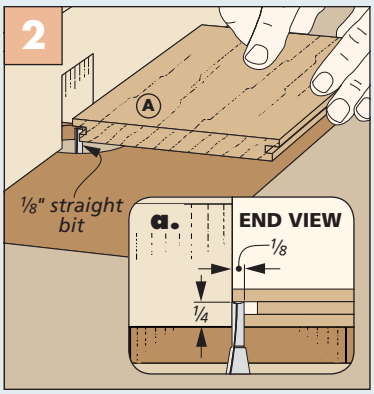

Trim Tongues. Remove part of the tongue on the long edges and the end of the top piece.

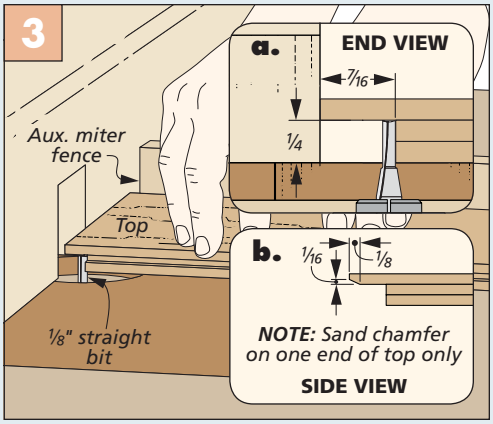

Rabbet & Chamfer. The other end of the top has a rabbet on the underside. This same end then gets chamfered (detail 'b').

be sure that the wood you'll be using is thoroughly dry and acclimated to your shop. This will minimize any wood movement after the project is done.

Also, the majority of the parts for each box require the use of ⅜"-thick hardwood. Since lumber is typically not sold in this thickness, I opted to use ½"-thick material and planed it down.

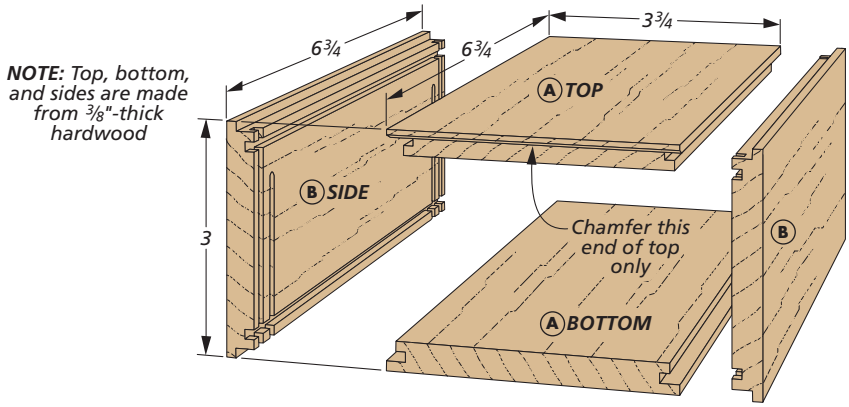

PARTS CONSTRUCTION

Building the puzzle box requires making several parts before the entire box gets assembled. Locking rabbet joints are used throughout to hold several of the box pieces together. After being cut to size, a lot of these parts have grooves, dadoes, and rabbets that are made almost exclusively at the router table using an ⅛"-dia. straight bit. Sticking with one size bit also helps minimize machine setup times.

TOP & BOTTOM. The How-To box at the bottom of the previous page walks you through the process for cutting the joinery on the top and bottom of the box. These two pieces are very similar. The exception being that the top has a couple additional rabbets along the ends, as well as a small chamfer on the underside of one end. The upper right drawing, along with details 'b' and 'c,' provide all of the dimensions you'll need to make these parts.

IDENTICAL SIDES. Much like the top and bottom, the two sides have a lot of joinery going on, as well. But the good news is that these two pieces are identical. If you take it one step at a time, they're pretty straightforward to make.

The How-To box at right shows most of the detailed joinery cuts you'll need to make on each side panel. Again, these are all done at the router table with a straight bit. The only operation that needs a little more explanation is the stopped dadoes.

The stopped dado near one end of each side piece is simple to complete (Figure 4). But the stopped dado near the other end requires a slightly different procedure. Turn to Shop Notes on page 66 to see the process I used to make these cuts. You can then set these four parts aside for now. They'll be assembled later.

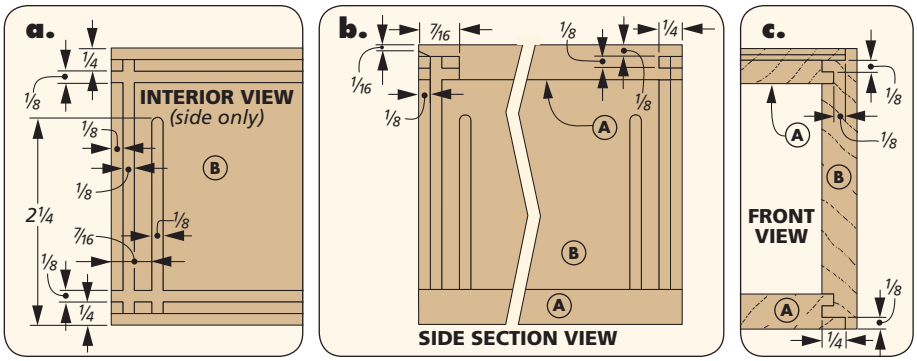

How-To: ROUT THE SIDES

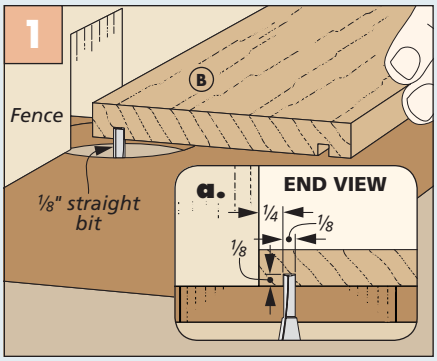

Grooves in Sides. Continuing with the ⅛" straight bit, rout the two grooves on the inside face of each side.

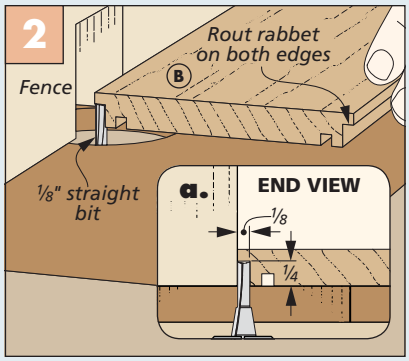

Deep Rabbets. You'll need to raise the bit and readjust the fence to rout the rabbets along the edges.

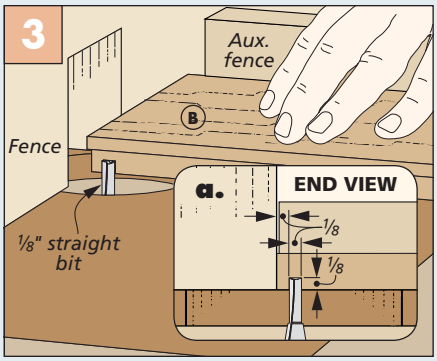

Through Dadoes. Now lower the bit and rout the through dadoes near the end of each side piece.

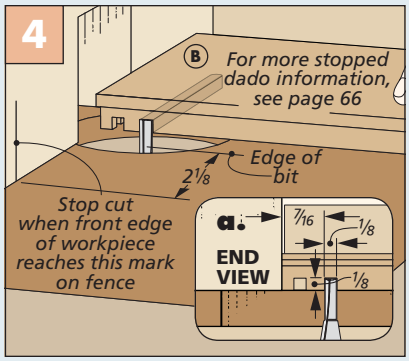

Stopped Dadoes. The stopped dadoes on the inside face of each side hold the dividers in place.

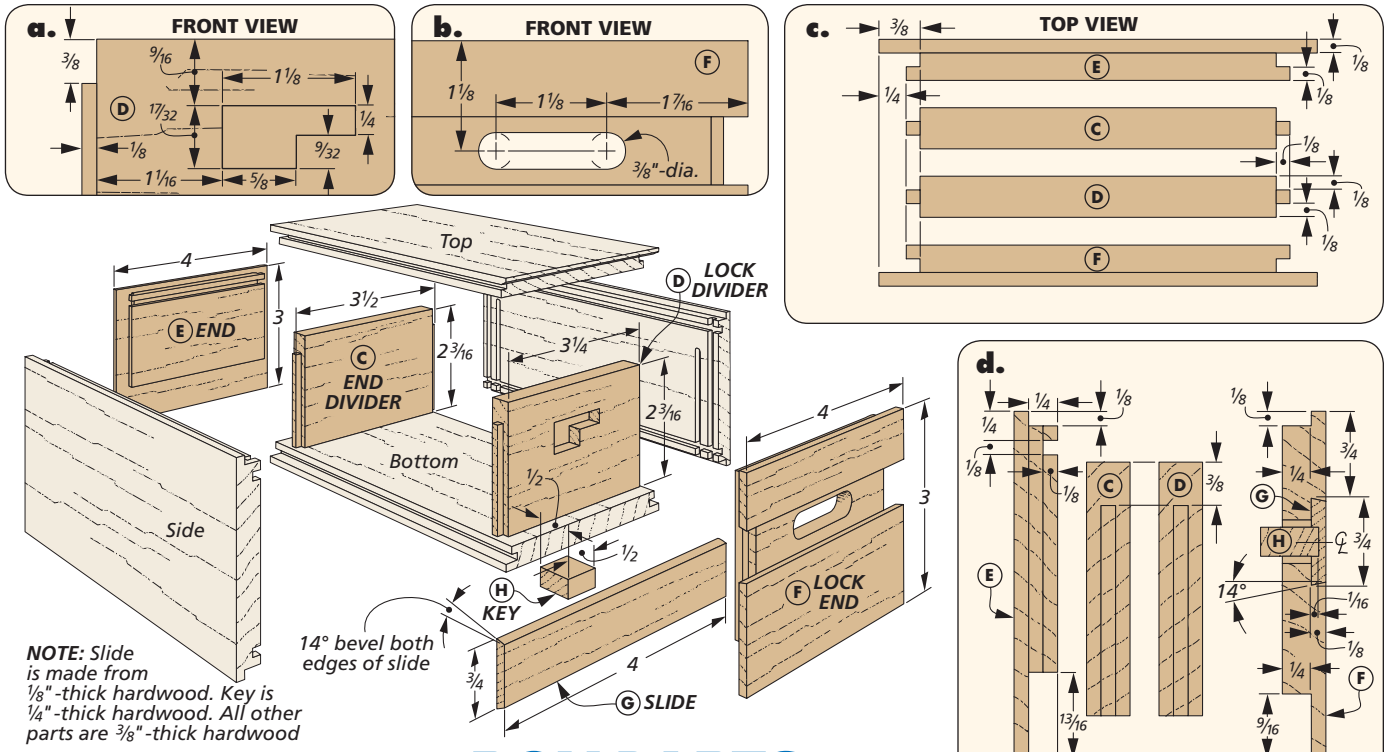

Completing the **BOX PARTS**

While the top, bottom, and sides make up the most visible parts of the box, the final six parts contain the majority of the "locking" features that allow the box to open and close. This includes a slide and key assembly that starts the opening sequence. But first, a couple of internal dividers are needed.

TWO DIVIDERS. The dividers serve two purposes. First, they provide rigidity to the box when they are glued to the bottom and sides. And second, the lock divider contains a shallow recess that will allow a slide and key assembly to move sideways as part of the opening process. Start by cutting the two dividers to size.

Figures 1 and 2 below show the steps needed to form the tenons on the ends of the dividers. The end divider is complete after the second step, but the lock divider still needs the shallow recess on its outside face. Figure 3 provides the details for forming this recess. After removing the bulk of the waste at the drill press, make sure to square up the walls of the recess with a chisel.

TWO END PANELS. After cutting a couple of blanks to size for the two end pieces, take a little time to look over the main drawing above, as well as details 'b' and 'd.' This will provide a good understanding of these parts and the

How-To: MAKE THE SHORT TENONS & LOCK DIVIDER RECESS

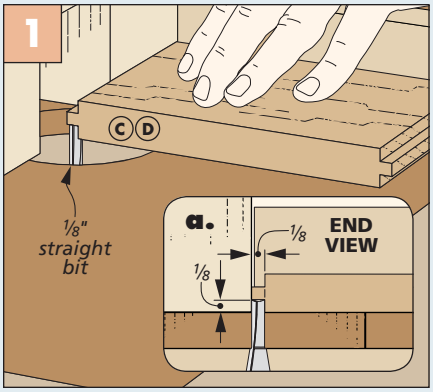

Short Tenons. It's back to the router table to form the short tenons on the ends of both divider pieces.

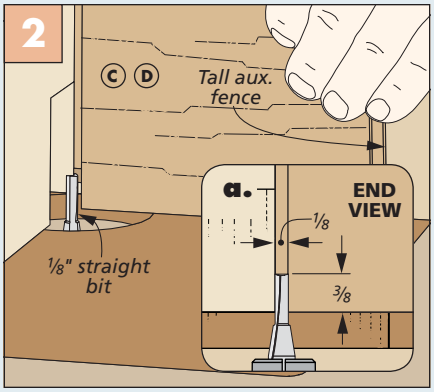

Nibble Away Waste. Raise the router bit in steps to remove the rest of the waste at the top of each tenon.

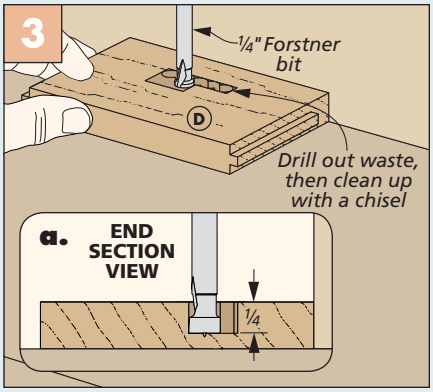

Recess. Remove the bulk of the waste for the shallow recess in the lock divider at the drill press.

jobs they do to make the box function correctly. These parts won't be glued in place, but rather will slide in the dadoes cut in the box sides.

The operations shown in Figures 1, 2, and 3 at right are completed on both end pieces. This just consists of a few rabbets and grooves, again made at the router table. Figure 4 shows the final groove needed only on the end piece.

The lock end, however, still needs a couple more steps to finish it up. The first is to create a dovetailed groove on the outside face. This groove mates up with the slide that'll be cut to size shortly. A single pass with a ¾"-dia. dovetail bit is all it takes (Figure 5). Sources on page 67 shows where you can find this dovetail bit.

A through slot centered on the freshly made groove is next. This slot makes room for the key to be attached to the slide during assembly. I formed the slot at the drill press by making a series of overlapping holes, as shown in Figure 6. Square up the edges with a chisel.

SLIDE ASSEMBLY. The two final pieces of the puzzle box are a slide and key. When brought together, they form the slide assembly on the lock end of the box. The key is simply cut to size from a long piece of ¼"-thick stock.

The slide requires a little more attention. Since this piece needs to fit in the dovetailed groove in the face of the lock end, I planed an extra-long blank so that it was a shade thicker than what I ultimately needed. (Just a hair under 3/16" is what I started with.)

Next, both edges of the slide need to be beveled. But making these cuts presents a challenge — there's a potential for the beveled edge to slip under the router table fence after it passes the dovetail bit. To prevent this, I raised the workpiece by taping it to a carrier board (Figure 7). After beveling both edges, check the fit in the lock end. Use sandpaper to sneak up on a sliding fit. Then, holding the slide in place in the groove, sand it flush with the surface of the lock end.

A shallow recess on the inside face of the slide provides a mounting point for the key. Figure 8 provides the details for making this at the router table. Now cut the slide to final length.

How-To: ROUT THE ENDS & SLIDE

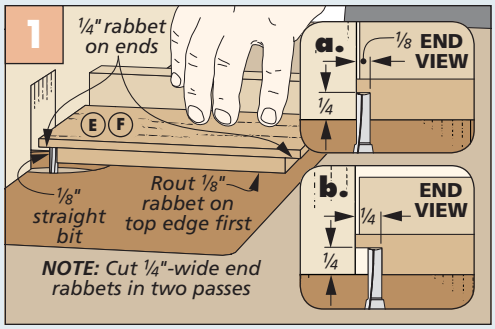

Form the Shoulders. Make the rabbets along the top edge and the ends of both end pieces at the router table.

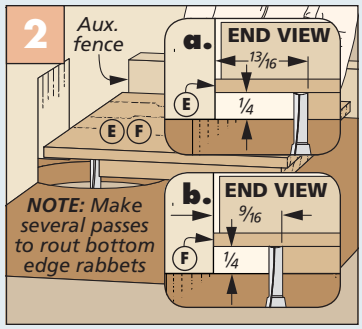

Lower Rabbets. Remove the rest of the waste for the rabbets on the bottom edges of the ends.

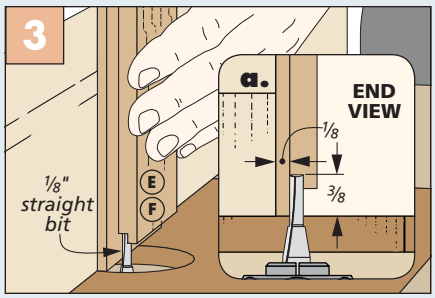

Groove Ends. Using the same bit, rout the groove along the edges of both end pieces to create the locking rabbet.

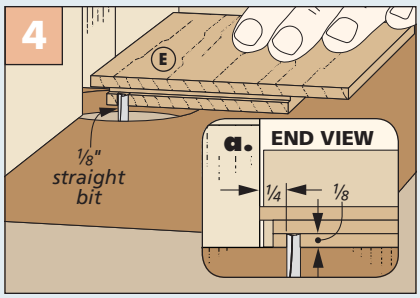

End Panel Groove. One more groove is needed on the end piece to complete the joinery on this part.

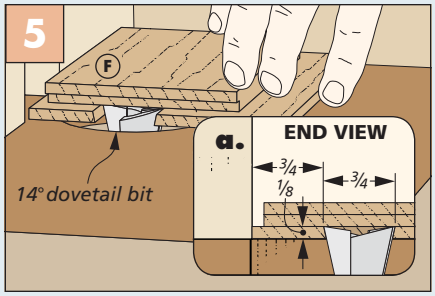

Dovetailed Groove. Make the dovetailed groove in the outside face of the lock end using a 14° dovetail bit.

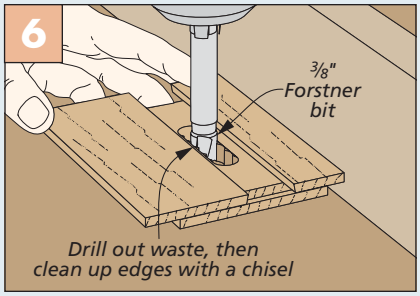

Through Slot. A slot centered in the dovetailed groove provides space for the key to attach to the slide.

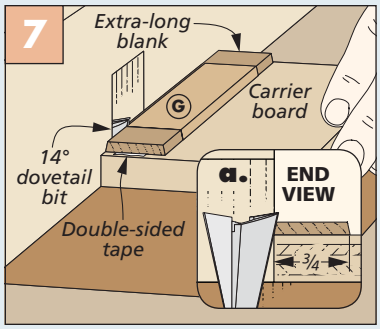

Bevel Edges. Attach the extra-long slide blank to a carrier board to cut the bevel on the edges of the slide.

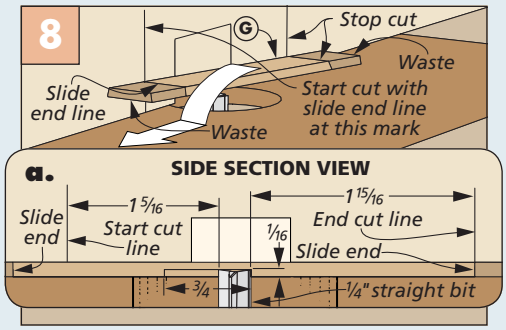

Recess. The recess on the inside face of the slide is made by lowering the workpiece onto the bit and routing to the end line.

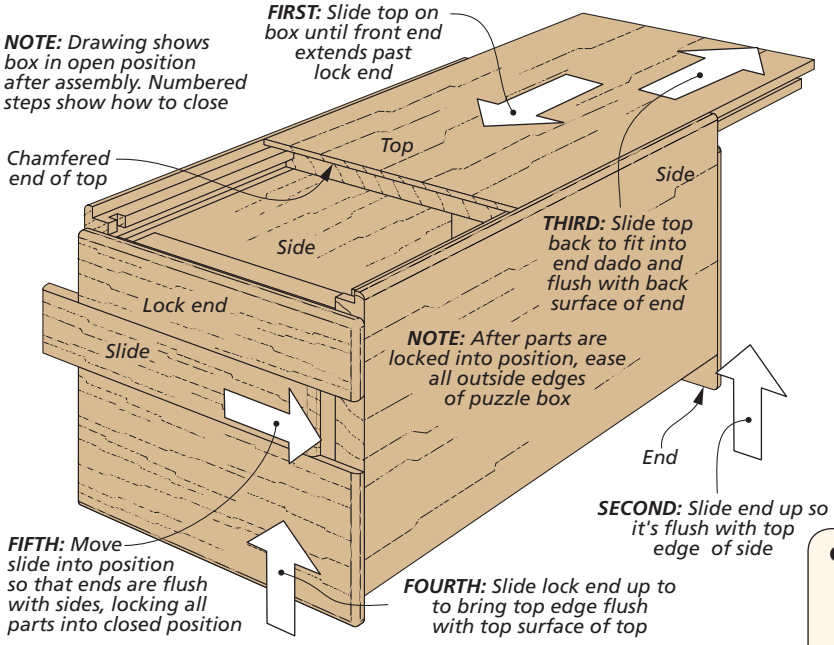

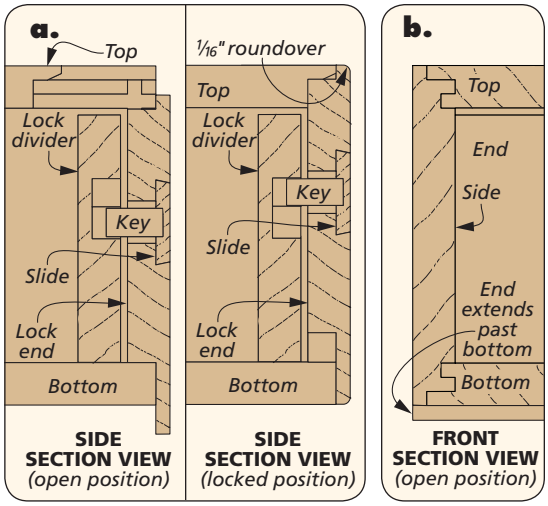

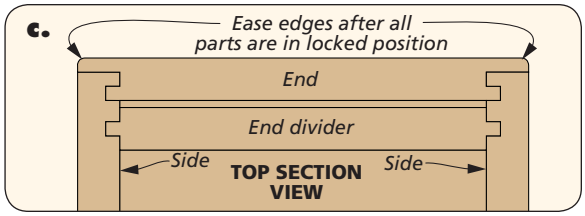

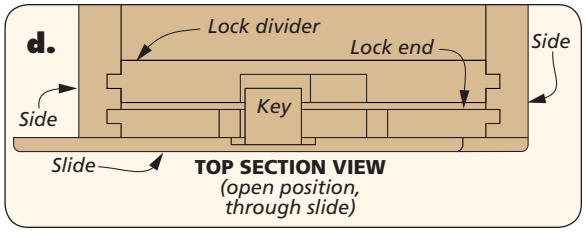

Assembling the BOX

At this point, all of the parts for the puzzle box are complete. But before you can start putting things together permanently, it's wise to take a little time and do a dry assembly. This ensures there won't be any surprises when you start adding glue down the road.

The How-To box at the bottom of this page and the box at the top of the next page provide the sequence to follow when doing the test fit. The bottom and two dividers are the easiest to check. They're eventually glued into the grooves and dadoes in the sides. So at this point, you're just looking for a snug fit between these five parts.

The slide, two ends, and top require a little more attention. These pieces need to slide easily in their respective grooves and dadoes. Spend some time checking the fit of each part and sanding where necessary.

Once you're satisfied that things are working smoothly, go ahead and glue the initial pieces together, as shown in Figures 1 and 2 below. Note that you're only gluing the bottom and dividers into one side for now. The other side is added at the end of the assembly.

MOVING PARTS. Now put the slide in position and glue the key into the shallow recess in the slide (Figure 1, top of next page). You can access this recess through the slot in the lock end. Use just enough glue to hold the key in place.

How-To: GLUE BOTTOM & DIVIDERS TO SIDE

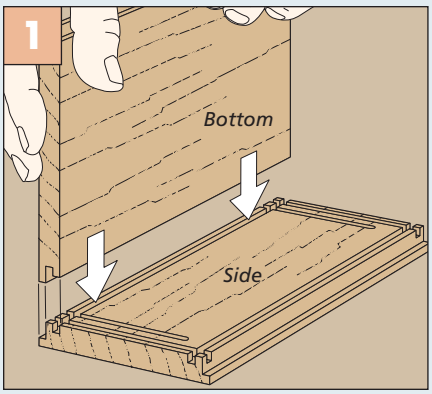

Add Bottom First. To start the assembly, one edge of the bottom is glued into a side panel.

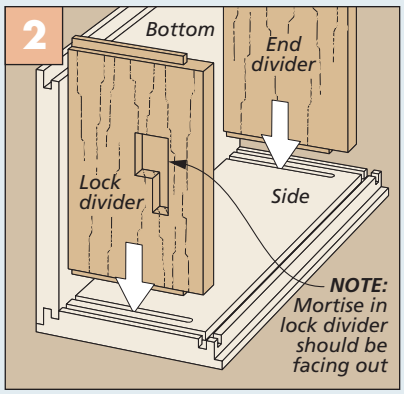

Dividers Up Next. The dividers are then added by gluing them into the stopped dadoes in the sides.

Materials & Supplies

A	Top/Bottom (2)	3/8 x 3 3/4 - 6 3/4
B	Sides (2)	3/8 x 3 - 6 3/4
C	End Divider (1)	3/8 x 2 3/16 - 3 1/2
D	Lock Divider (1)	3/8 x 2 3/16 - 3 1/2
E	End (1)	3/8 x 3 - 4
F	Lock End (1)	3/8 x 3 - 4
G	Slide (1)	1/8 x 3/4 - 4
H	Key (1)	1/4 x 1/2 - 1/2

1/2" x 7 1/2" - 24" Hardwood (1.3 Sq. Ft.)

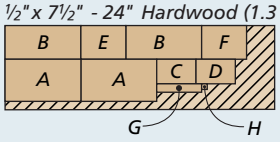

NOTE: All parts are planed to final thickness

You don't want any squeezeout gluing the slide to the end.

The end and lock end are simply set into position against the bottom and side. No glue is needed for these parts. The lock end may need to be slightly "wiggled" into position so the key rests in the recess in the lock divider (Figure 2).

Now you can carefully glue the other side panel to the bottom and dividers as shown in Figure 3. Again, be very careful to not get any glue on the end or lock end parts.

The final piece to this puzzle is to slide the top in place. Both ends need to be lowered slightly to let the top slide into position. Make sure the chamfered end of the top is facing the lock end of the box (Figure 4). To wrap things up, I eased all of the outside edges of the box with sandpaper.

KEY TO UNLOCKING. Having assembled the puzzle box, you probably have a pretty good idea of how to open it up. The photos below simply serve as a reminder of the steps to follow.

FINAL DETAILS. Since there are moving parts on this project, I didn't want a thick finish "gumming" things up. So I opted for one light coat of urethane followed by a single coat of wax to keep things sliding smoothly. You can turn to Sources on page 67 to get the details on the finish I used. Now hand your box over to an unsuspecting victim and sit back and enjoy as they try to figure out how to get it open. W

How-To: COMPLETE THE BOX ASSEMBLY

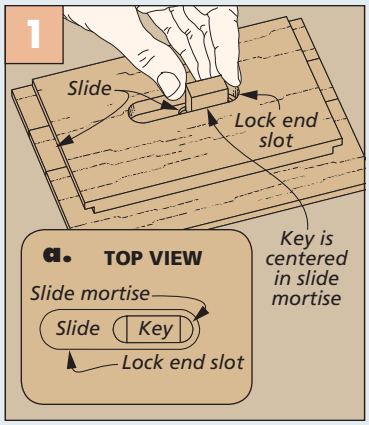

Add the Key. A small amount of glue is all that's needed to secure the key to the slide.

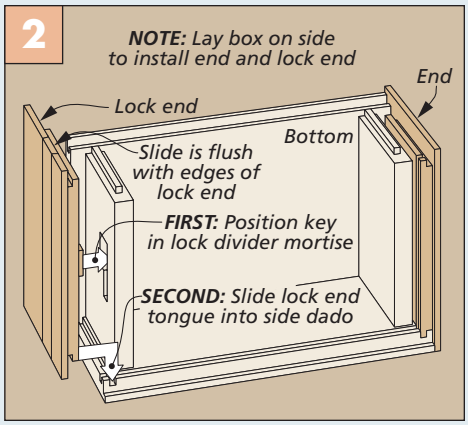

Set Ends in Place. The end and lock end are set in position next. Do not use any glue on these parts.

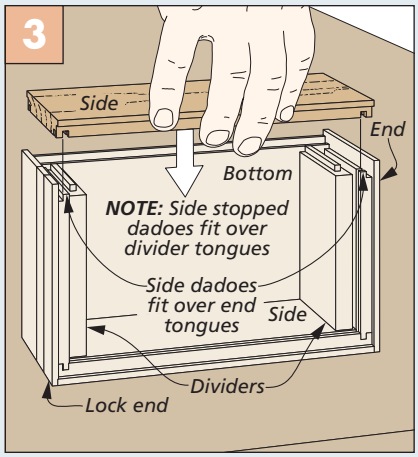

One More Side. The other side of the box can now be glued to the bottom and dividers.

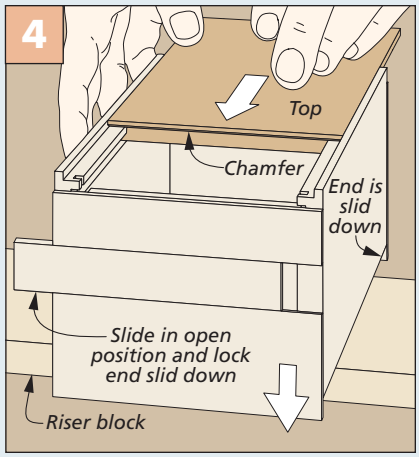

Top. With both ends in their lowered positions, the top is slid in place with the chamfer facing the lock end.

How-To: UNLOCK THE PUZZLE BOX

First, move the slide to the side until it stops. Then shift the entire lock end assembly down.

Now, slide the top towards the lock end. This releases the other end, allowing it to be lowered.

Finally, the top of the box slides back toward the end. It can be completely removed, if desired.

All-New One-Wall Workshop

A unique construction method and low-cost materials combine to create a versatile work area and plenty of storage in a compact space.

Carving out a dedicated space for a workshop can go a long way toward making woodworking more enjoyable and projects easier to build. The idea behind this workshop setup is to pack as much woodworking potential into a 14-foot section of a garage or basement wall as possible. It's built around components to suit your needs and space.

A stout workbench and a multipurpose power tool workcenter anchor the system. Several space-saving carts dock in the space underneath. Up above, pegboard panels and a row of cabinets provide loads of storage for your gear.

In this issue, I'll kick things off by tackling the bench, workcenter, and cabinets, so you can get your shop up and running.

Begin with a **HEAVY-DUTY WORKBENCH**

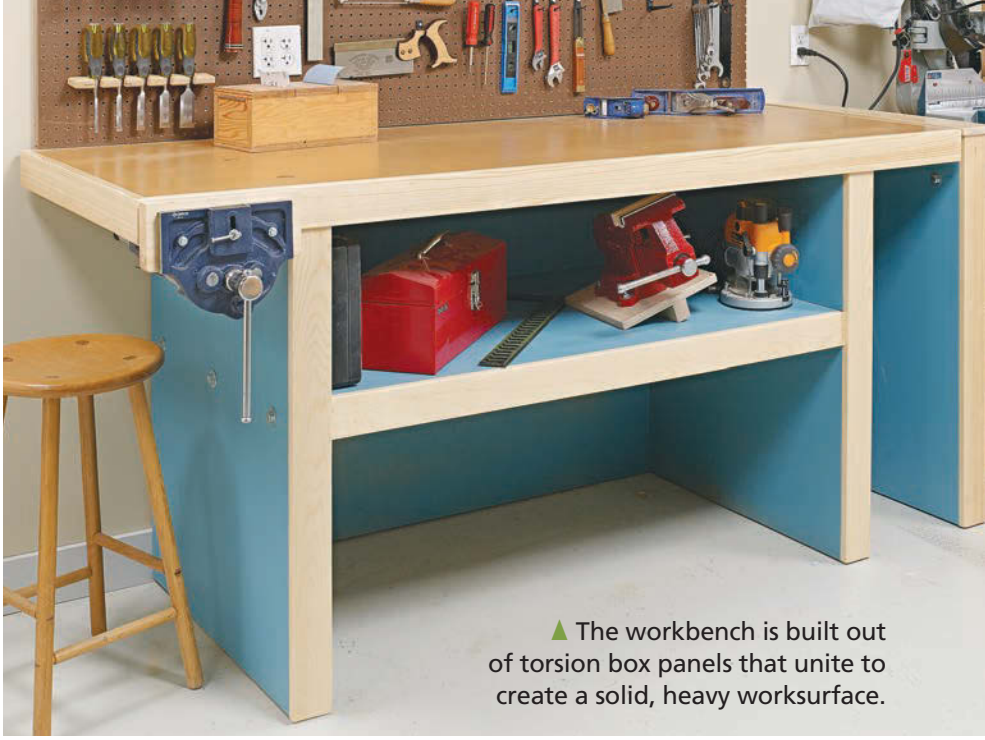

▲ The workbench is built out of torsion box panels that unite to create a solid, heavy worksurface.

Building the workbench first makes sense. Once it's complete, you have a generous surface for making the other components — and other projects.

TORSION BOX. A well-built bench has a couple of requirements. The top should be flat and rigid. And the base needs to resist flexing and twisting in use. To meet these requirements, this bench is made from a series of torsion box panels.

Each panel consists of a sandwich of MDF skins glued and nailed to a core of construction lumber filler pieces. The result is a stout structure that easily stands up to heavy use.

HOW TALL? Because you'll spend a lot of time at the bench, you want to be comfortable as you work. So the question is, "What's the best height?"

This turned into quite a discussion around our shop. Some things to consider include your height and the types of tools you use. In the end, it came down to working at the miter saw.

I prefer an upright posture when using a miter saw for comfort and better visibility of the workpiece as it's cut. For me, that puts the miter saw table at 38". And I wanted the workbench to serve as a support for cutting long boards. So I decided to make the bench and the workcenter the same height.

If you decide to make the workbench shorter, you'll want to keep the distance between the shelf and the floor the same as the plans. This leaves enough room to house an assembly cart (shown in the next issue) without making any changes.

SIDE ASSEMBLIES. With the height question settled, you can get to work on the base by building the mirror-image side assemblies. The box below highlights the main steps. The starting point is the MDF outer side piece. The core of filler pieces come next. These are lengths of 2x4s that are added in a specific order, as shown in Figure 1. The fillers are flush with the top and front edge of the side. They're glued to the side and then secured with brad nails (Figure 2).

There are a couple items that I want to draw your attention to. In detail 'a' on the next page, you'll notice that the side piece extends past the fillers along the back edge. This creates a rabbet that's used to register the back.

The other item of note is the position of the bottom filler piece. It extends past the

How-To: ASSEMBLE THE WORKBENCH PANELS

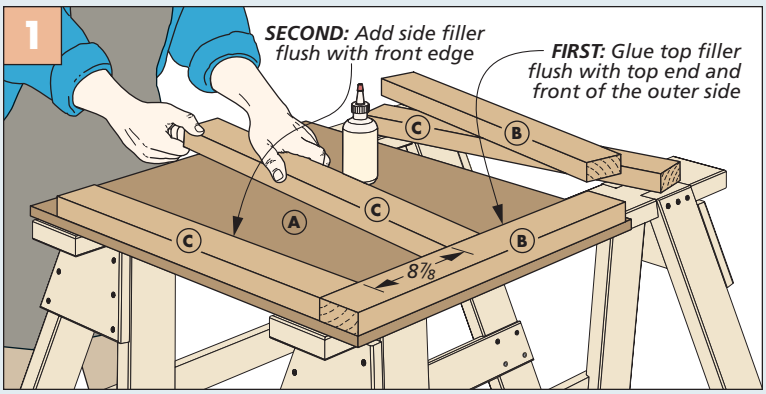

Begin Assembly. Use sawhorses to create a flat assembly space. After locating the top and first side filler on the outer side, glue down the remaining side fillers and finally the bottom filler piece.

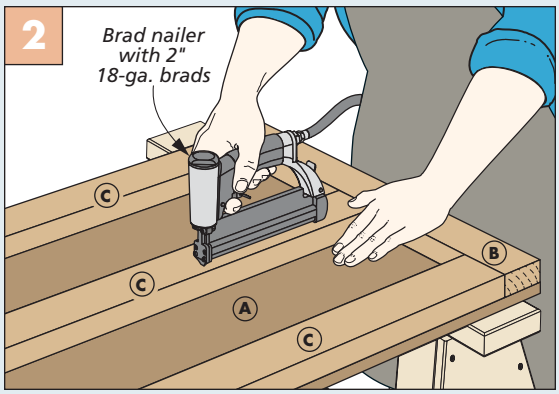

Nailed It. Securing the filler pieces with glue and brads eliminates the need for clamps and waiting for glue to dry, so you can keep working.

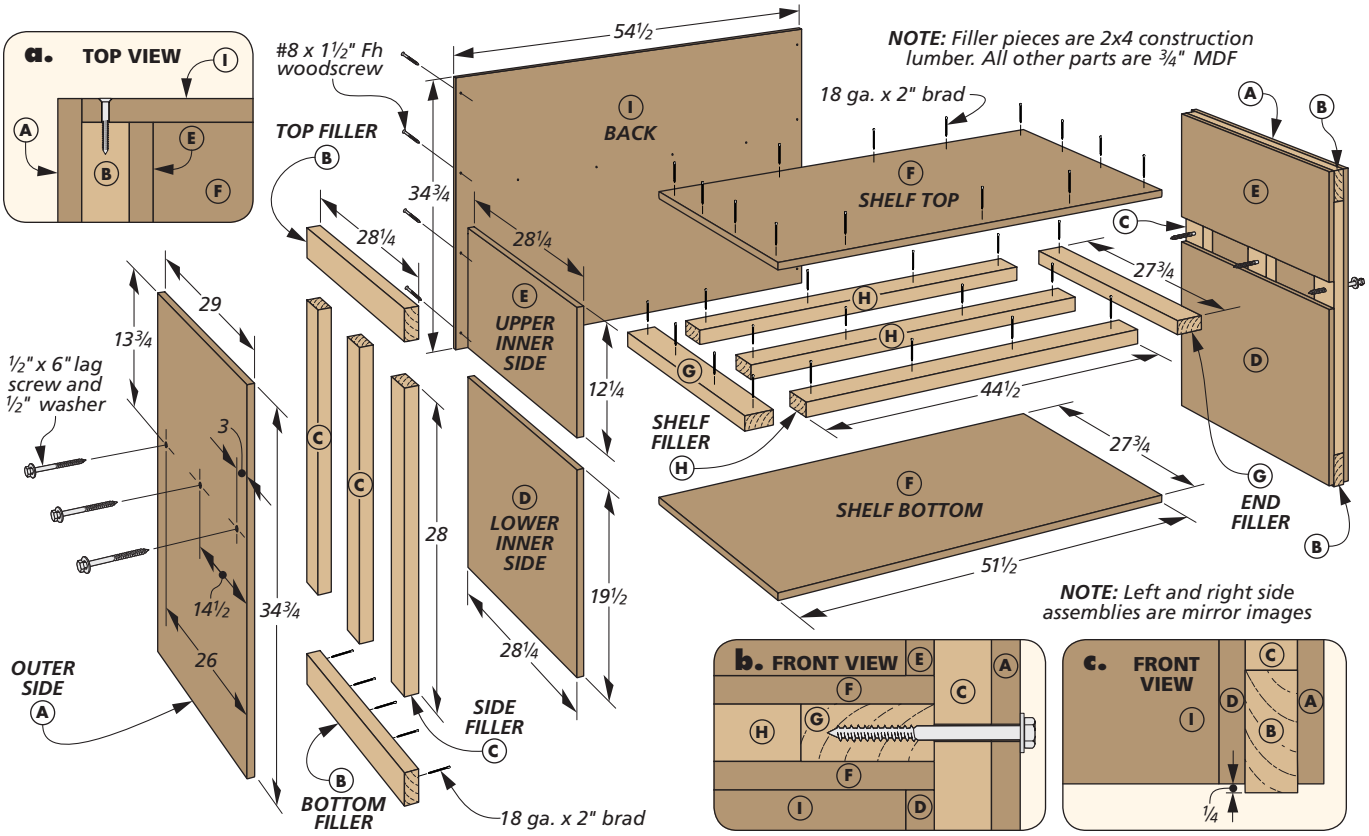

lower edge of the side by ¼", as in detail 'c.' This raises the MDF side off the floor, which prevents moisture from wicking up and damaging the side pieces.

The inner face of the side assembly is made up of two panels. A gap between the panels houses a storage shelf that also increases the stiffness of the whole workbench. Install the lower panel first, gluing and nailing it in place, as you can see in Figure 3. Then drill mounting holes for the shelf (Figure 4). These pass through the outer side and filler pieces, as shown in the drawing above. Hold off on installing the upper panel until the shelf is built and attached to the sides.

THE SHELF. The shelf shares the same construction method as the side assemblies. What's different is that the shelf is simpler. The top, bottom, and fillers are flush on all four sides (drawing above and detail 'b'). The shelf is attached to the sides with long lag screws that provide a secure connection and allow you to disassemble the bench to move it, as shown in Figure 5 and detail 'b.'

Work on the base wraps up by gluing and nailing the upper side pieces in place. An MDF back panel is screwed into the rabbet and shelf (detail 'a').

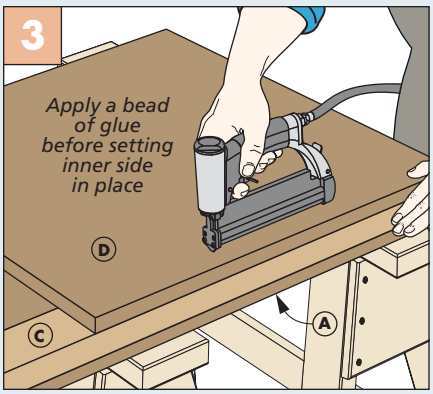

Add Lower Side. The lower piece is installed flush with the side fillers. The bottom filler is slightly proud.

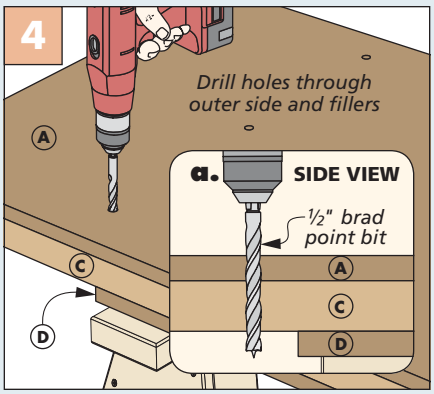

Clearance Holes. Take care to hold the drill plumb while drilling the clearance holes for the lag screws.

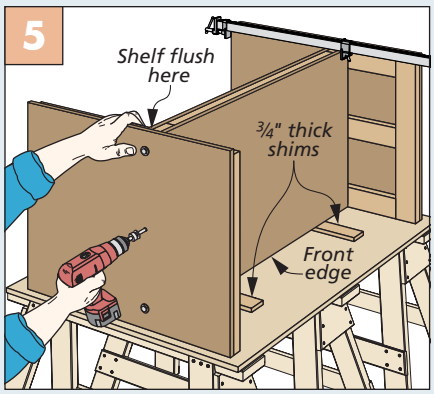

Install the Shelf. Use shims to hold the shelf flush with the rabbet on the back edge of the side assemblies.

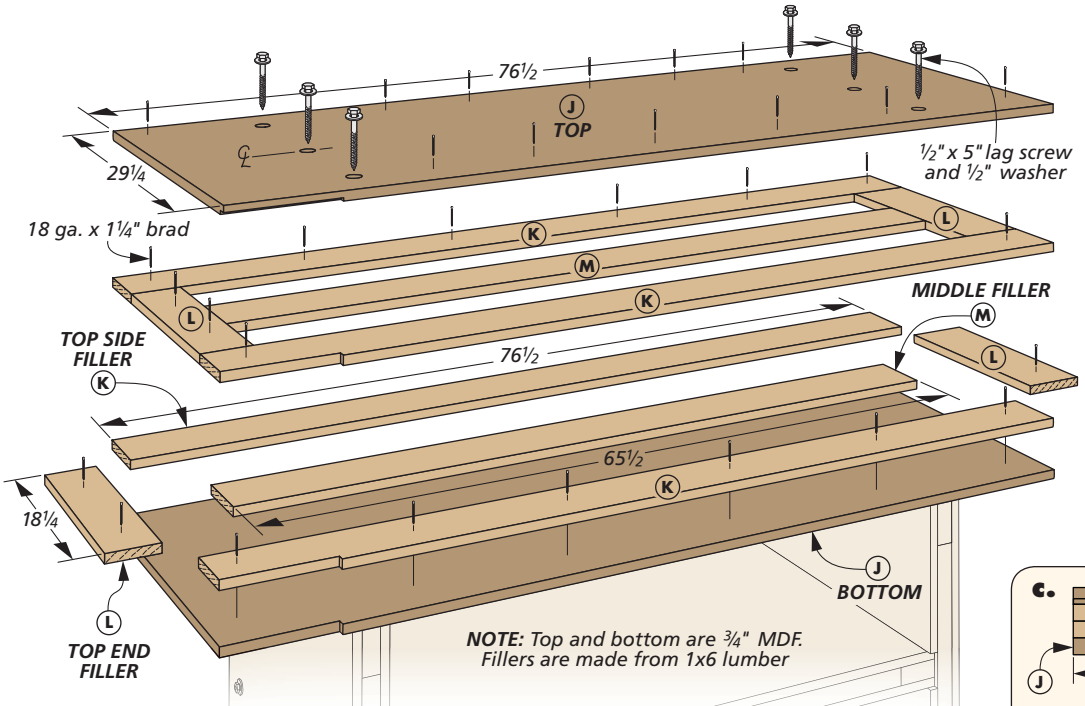

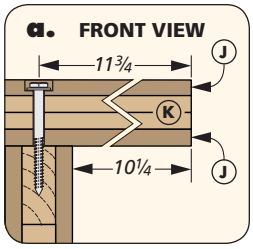

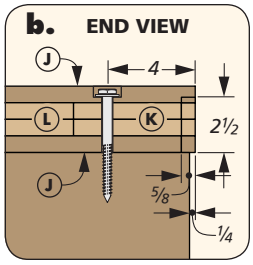

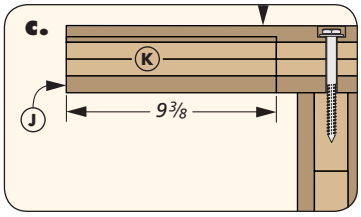

Adding the LAYERED BENCHTOP

With the construction of the base under your belt, building the workbench top should go pretty smoothly. The drawing above shows the parts that go into the benchtop assembly. The sandwich-style structure is familiar, but there are two key differences to point out.

For the benchtop, a flat, beefy surface is vital. To create a benchtop with smaller hollow spaces, I used wider boards for the filler pieces. This results in an assembly that feels more solid in use.

At the home center, I found that the 1x6 boards were drier and flatter than the 2x6 boards. So I changed up the construction slightly by making the filler pieces from two layers of 1x6 boards.

As for the order of operations, I built up the top working from the bottom up. Because the filler pieces are thinner, make sure to load shorter (1¼") brads in your nailer so they don't poke through when fastening the first layer to the bottom. The edges of the filler pieces should be flush all the way around for making the top (details 'a,' 'b,' and 'c').

VISE POCKET. In my opinion, every bench needs a vise. So I selected a bolt-on, quick-release model. To accommodate the vise, cut a pocket in the front edge of the benchtop. This recesses the rear jaw so you can clamp a long workpiece firmly against the front of the bench. Figure 1 below shows how a hand-held router makes quick work of removing most of the waste in multiple passes.

How-To: BENCHTOP DETAILS

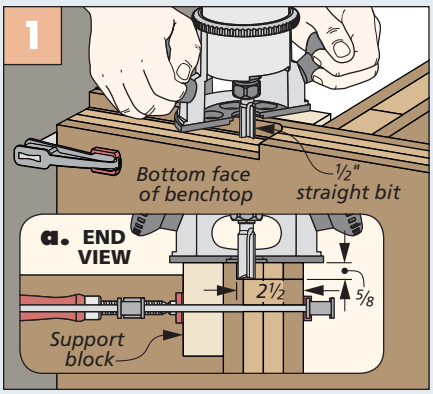

Vise Pocket. Clamp a block to the top face of the benchtop to provide support while routing the pocket.

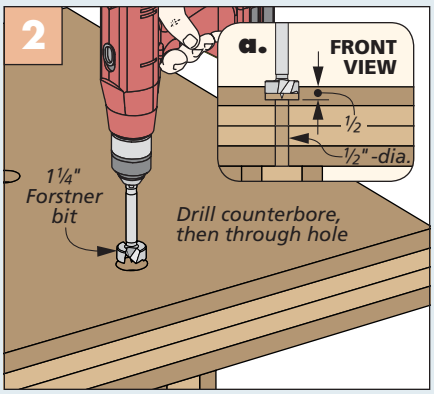

Holes. Drill counterbores to recess the washers and heads of the lag screws used to attach the benchtop.

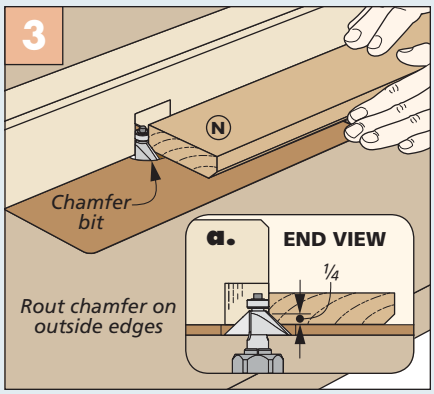

Chamfer. Rout a small chamfer on the edging strips before they're glued and nailed to the bench.

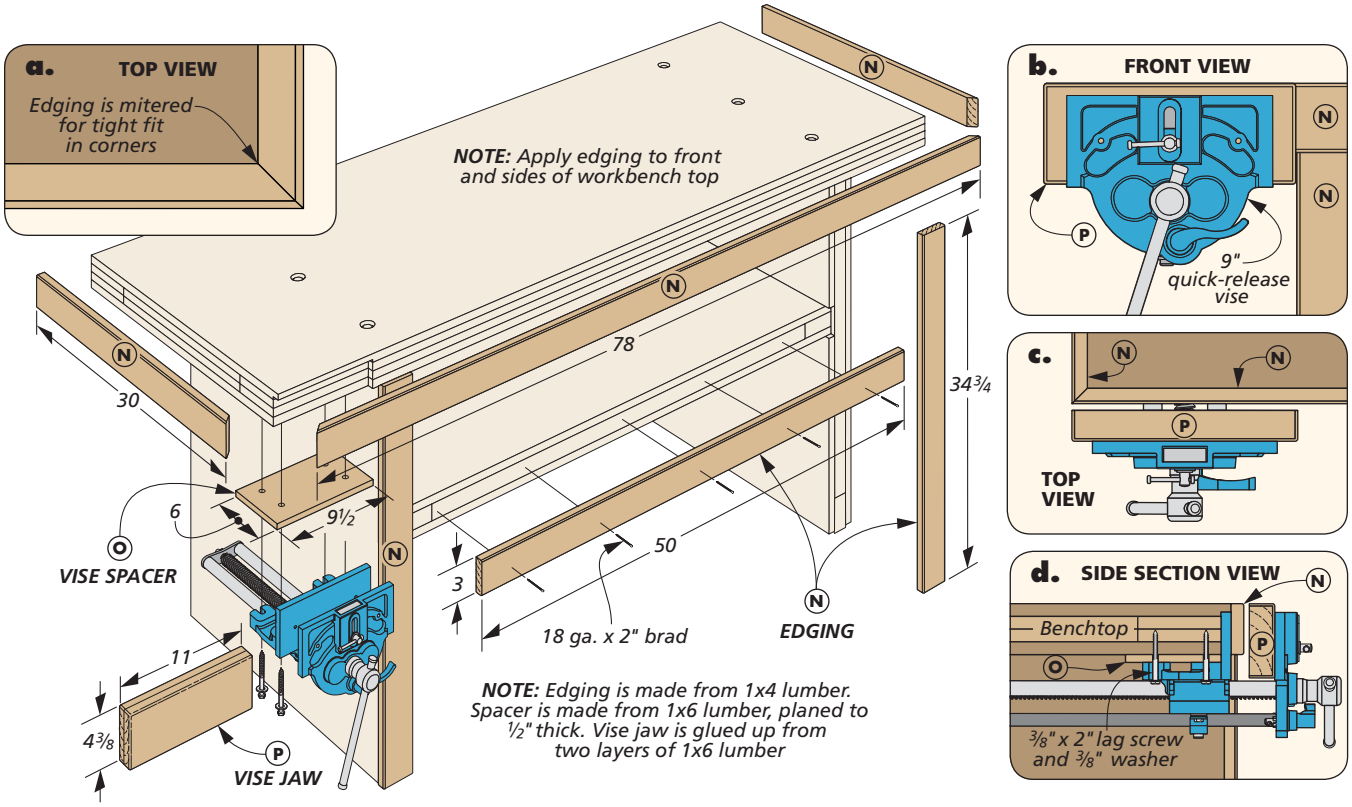

Clean up the corners with a chisel for the vise jaw to fit snugly.

MOUNTING HOLES. Just like the shelf, the top is attached with lag screws. The benchtop is centered side to side over the base assembly. To keep the benchtop clear, recess the heads and washers in counterbores, as shown in detail 'b' and Figure 2 on the previous page.

FINAL DETAILS

The torsion box construction method is sturdy, but the edges are vulnerable to damage and don't look the best. So I covered them with strips of "one-by" stock ripped to match the width of the panels. Chamfer the edges and nail them in place, as shown in the drawing above and Figure 3 on the previous page.

The workbench is intended to be against a wall, so you only need apply edging on the ends and front edge. Miter it at the corners (details 'a' and 'c').

INSTALL THE VISE. Before installing the vise, I made a spacer to fit between the top and vise to keep the jaws below the surface of the bench. Finally make a front jaw from two layers of "one-by" stock.

Materials, Supplies & Cutting Diagram (for the workbench)

A	Outer Sides (2)	3/4 MDF - 29 x 34 3/4
B	Top/Bottom Fillers (4)	1 1/2 x 3 1/2 - 28 1/4
C	Side Fillers (6)	1 1/2 x 3 1/2 - 28
D	Lwr. Inner Sides (2)	3/4 MDF - 19 1/2 x 28 1/4
E	Upper Inner Sides (3)	3/4 MDF - 12 1/4 x 28 1/4
F	Shelf Top/Btm. (2)	3/4 MDF - 27 3/4 x 51 1/2
G	End Fillers (2)	1 1/2 x 3 1/2 - 27 3/4
H	Shelf Fillers (3)	1 1/2 x 3 1/2 - 44 1/2
I	Back (1)	3/4 MDF - 34 3/4 x 54 1/2
J	Top/Bottom (2)	3/4 MDF - 29 1/4 x 76 1/2
K	Top Side Fillers (4)	3/4 x 5 1/2 - 76 1/2
L	Top End Fillers (4)	3/4 x 5 1/2 - 18 1/4
M	Top Mid. Fillers (2)	3/4 x 5 1/2 - 65 1/2
N	Edging	3/4 - 3 x 275 rgh.
O	Vise Spacer (1)	1/2 x 6 - 9 1/2
P	Vise Jaw (1)	1 1/2 x 4 3/8 - 11

- (6) 1/2" x 5" Lag Bolts
- (12) 1/2" Washers
- (12) #8 x 1 1/2" Fh Woodscrews
- (6) 1/2" x 6" Lag Bolts
- 18 ga. x 1 1/4" Brads
- 18 ga. x 2" Brads
- (4) 3/8" x 2" Lag Bolts
- (4) 3/8" Washers
- (1) 9" Quick-Release Bench Vise

2x4 - 96" Fir (Two Boards)

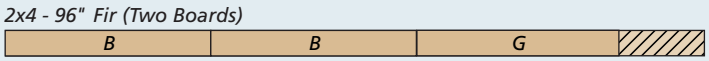

2x4 - 96" Fir (Two Boards)

2x4 - 96" Fir (Three Boards)

1x6 - 96" Fir (Two Boards)

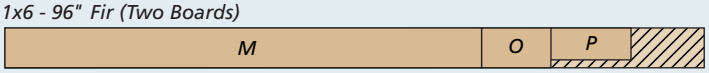

***NOTE:** Part 'O' planed to 1/2" thick*

1x6 - 96" Fir (Four Boards)

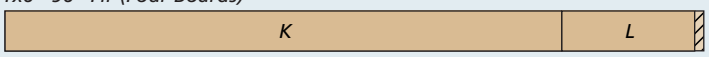

1x4 - 96" Fir (Three Boards)

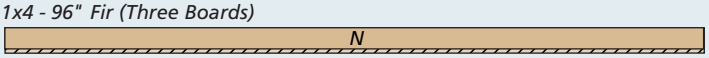

***ALSO NEEDED:** Five 49" x 97" sheets of 3/4" MDF*

A power tool **WORKSTATION**

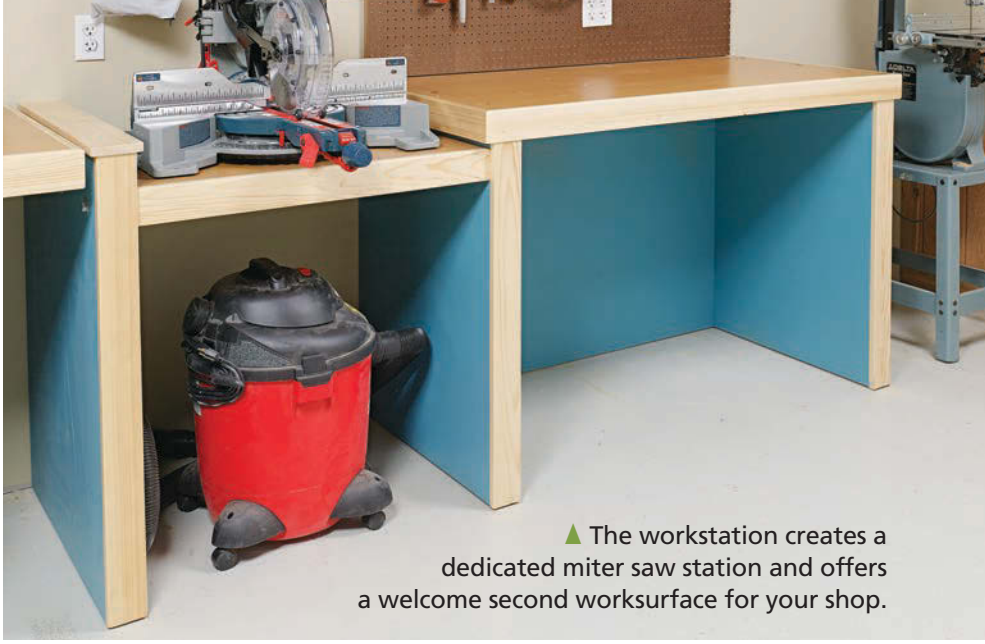

▲ The workstation creates a dedicated miter saw station and offers a welcome second worksurface for your shop.

The companion to the workbench is the workstation shown here. And even a quick glance shows the family resemblance. The idea behind this component is having a solid, bonus worksurface that's built into the fabric of your shop. It serves as a home for your miter saw and benchtop power tools and, ideally, helps to keep your main workbench clear.

As the main worksurface, the bench is "overbuilt" to a certain extent to maximize its strength and flatness. Since the workstation is meant as the bench's counterpart, those qualities aren't at the forefront. However, the construction is all based around the same sandwich-style torsion box panels you've been working on so far.

The drawing below has all the details for making the base. I'd like to remind you of a few details and then point out some differences in the construction process. Keep in mind as you cut parts that the outer side panels are wider than the inner panels. This is to create the rabbet for the back (detail 'a').

One key difference is that the workstation doesn't have a shelf below the top. As I said, this project is meant to serve as a home base for a range of power tools. And next issue, you'll build a pair of carts (for a planer and router table) that tuck into the open space.

Leaving out the shelf means the inner panels of the side assembly can be single pieces. And don't forget that the bottom filler extends below the side panels, as you can see in detail 'c.'

THE TOP. The last place you'll find a difference between the workbench and workstation is in the makeup of the top. The flatness of the top is less critical here, so I used 2x4s as the fillers.

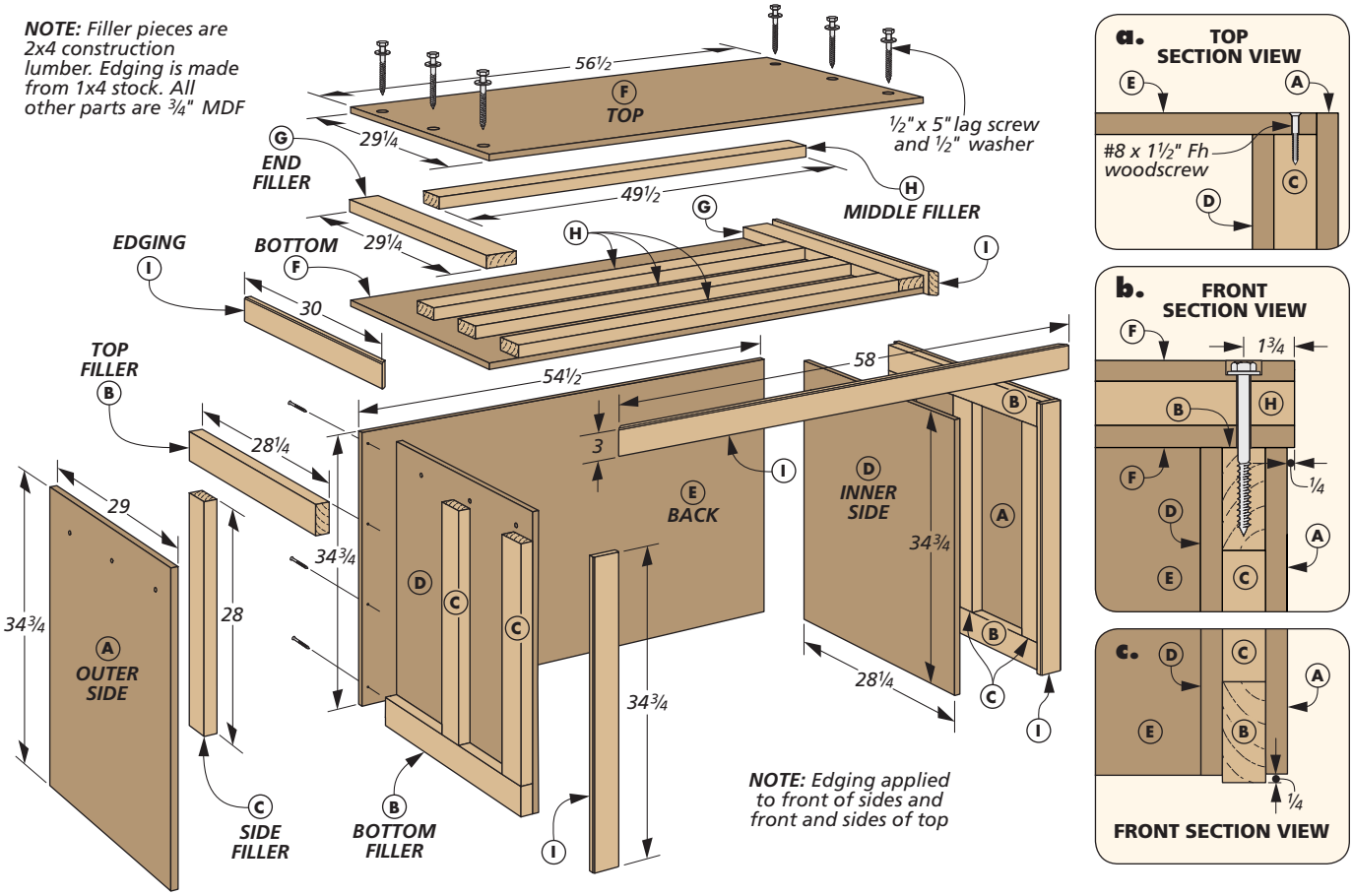

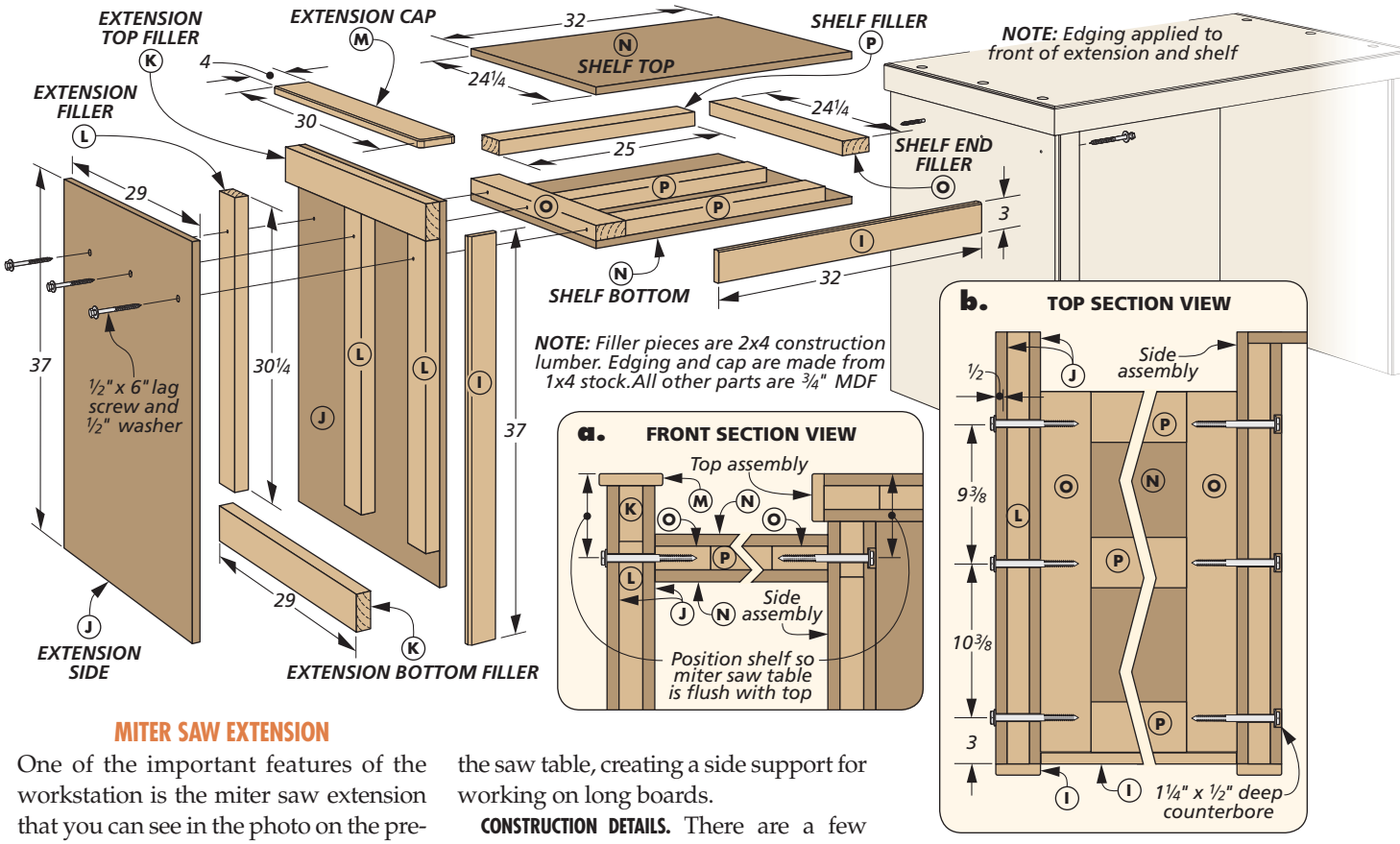

MITER SAW EXTENSION

One of the important features of the workstation is the miter saw extension that you can see in the photo on the previous page. The extension is made up of a support assembly that's basically a modified side assembly along with a shelf, as shown in the drawings above. This setup lowers the miter saw so that the top of the workstation is flush with the saw table, creating a side support for working on long boards.

CONSTRUCTION DETAILS. There are a few details to keep in mind when building the extension. The overall height of the side support assembly needs to be the same overall height as the main part of the workstation once the cap is installed, as you can see in detail 'a.'

The side extension can be installed on either side of the workstation, depending on the layout of your space. Then use your miter saw to determine the position of the shelf before installing it.

Materials, Supplies & Cutting Diagram (for the workstation)

A	Outer Sides (2)	¾ MDF - 29 x 34¾
B	Top/Bottom Fillers (4)	1½ x 3½ - 28¼
C	Side Fillers (6)	1½ x 3½ - 28
D	Inner Sides (2)	¾ MDF - 28¼ x 34¾
E	Back (1)	¾ MDF - 34¾ x 54½
F	Top/Bottom (2)	¾ MDF - 29¼ x 76½
G	End Fillers (2)	1½ x 3½ - 29¼
H	Middle Fillers (4)	1½ x 3½ - 49½
I	Edging	¾ x 3 - 275 rgh.
J	Ext. Sides (2)	¾ MDF - 29 x 37
K	Ext. Top/Bot. Fillers (2)	1½ x 3½ - 29
L	Ext. Fillers (3)	1½ x 3½ - 30¼
M	Extension Cap (1)	¾ x 4 - 30
N	Shelf Top/Bot. (2)	¾ MDF - 24¼ x 32
O	Shelf End Fillers (2)	1½ x 3½ - 24¼
P	Shelf Fillers (3)	1½ x 3½ - 25

- (6) ½" x 5" Lag Bolts
- (12) ½" Washers
- (8) #8x 1½" Fh Woodscrews
- (6) ½" x 6" Lag Bolts
- 18 ga. x 2" Brads

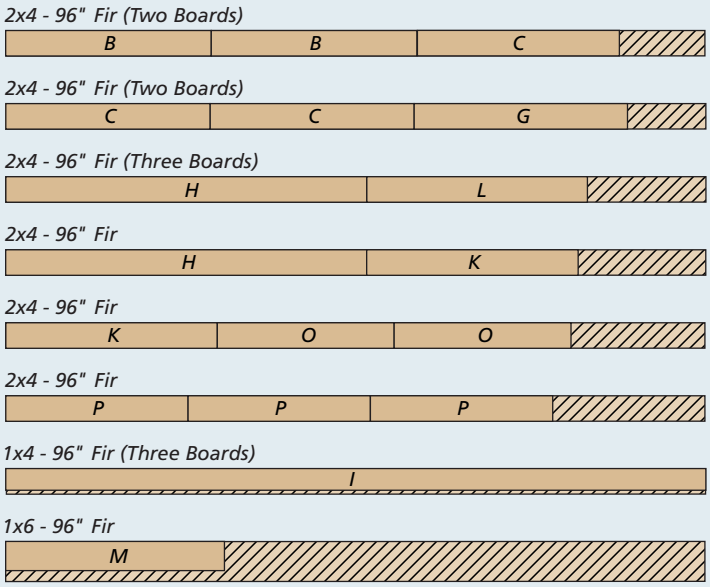

ALSO NEEDED: Six 49" x 97" sheets of ¾" MDF

Easy-to-build CABINETS

No workshop is complete without plenty of storage space. So a line of cabinets crowns this one-wall workshop from end to end. (I built seven cabinets.)

With this many cabinets to make, you don't want to fuss with a lot of complicated details. While the joinery is pared down, the design doesn't skimp on strength. Dadoes and screws easily handle the joinery duties.

I also added some solid-wood cleats and fillers to reinforce the parts for increased stiffness. These cabinets are so versatile and easy to make that you may want to build a few more for other places in your house or garage.

STRAIGHTFORWARD CASE. The basic structure of the case is made up from a pair of sides joined with dadoes to a subtop and bottom, as shown in the drawing below. Like the other parts of the project, I used MDF for the case pieces.

When creating several identical units like these cabinets, it's important to size all the similar components at the same time. This way, you can be sure of getting consistently sized cabinets. At this point, I marked the case sizes for the hinges. But with 14 doors to hang, measuring and marking could get tedious.

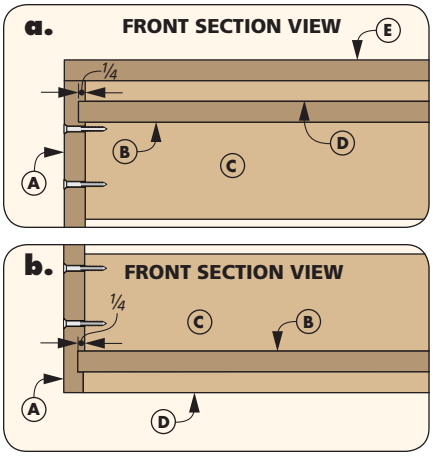

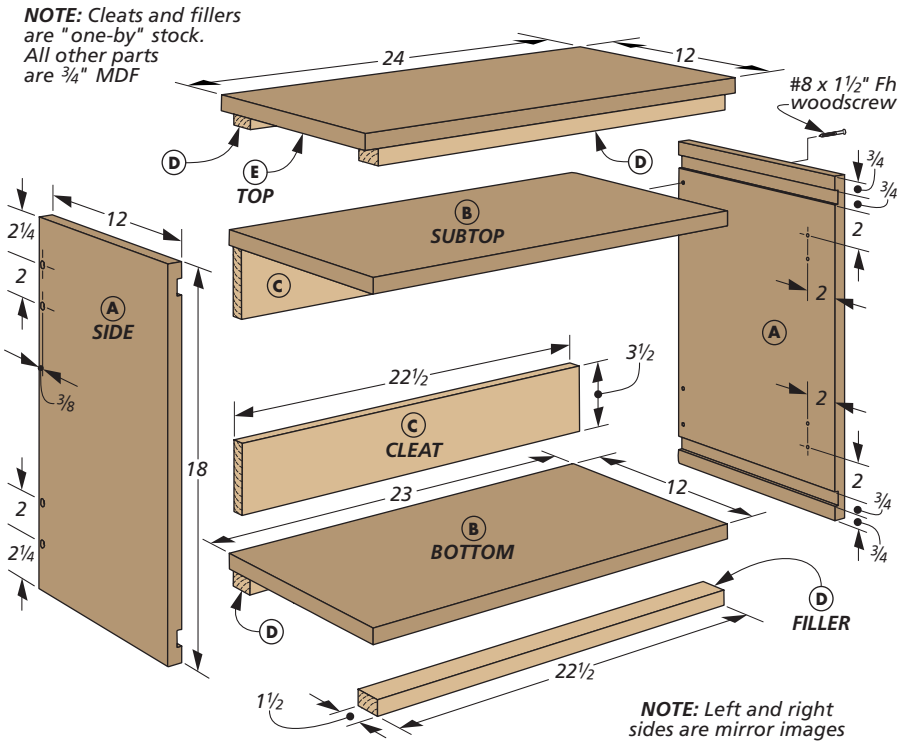

How-To: DADOES

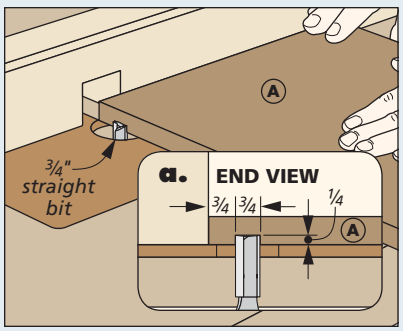

Router Table. Use the same fence setting to rout the dadoes near the top and bottom ends of the sides.

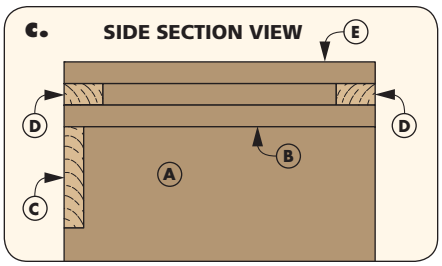

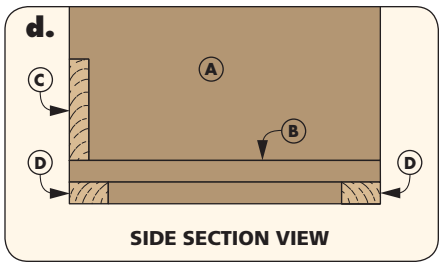

So I came up with a marking jig. You can find the details on page 65.

In the lower left box, you can see how I cut the dadoes at the router table. Then after gluing up the case pieces, it's time to call in the reinforcements. A pair of solid-wood cleats serve as the "back" of the case, as shown in details 'c' and 'd' on the previous page. Additionally, the cleats provide a sturdy surface for attaching the cabinets to the wall. The cleats are glued to the bottom and subtop. Screws secure the cleats to the case sides.

The space above and below the bottom and subtop is designed to hold filler pieces, as in details 'a' and 'b.' Once glued in place, the fillers stiffen the horizontal pieces to resist sagging and give the case a more substantial look, as well.

The remaining case piece is a top panel glued to the top of the case. This piece gives the top of the case a continuous surface that could also be used for storage. At this point, you can paint the case.

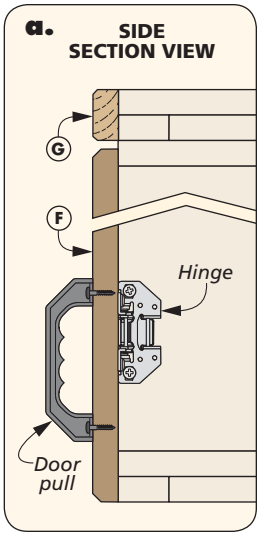

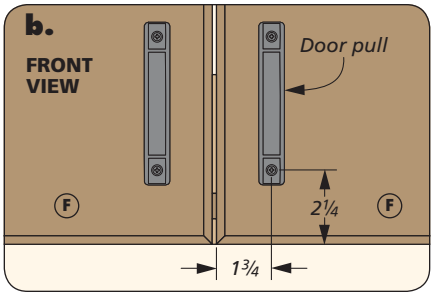

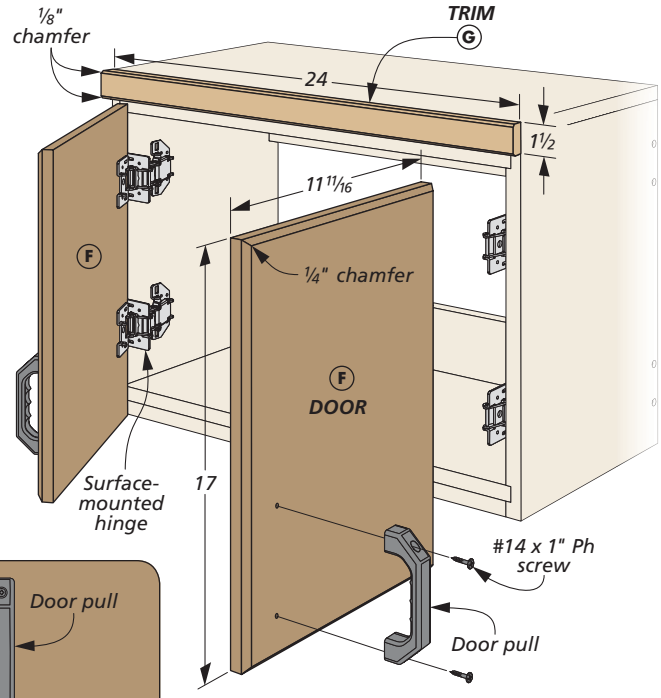

***NOTE:** Doors are made from ¾" MDF. Trim is "one-by" lumber*

DOORS & TRIM

With the case complete, you're ready to enclose it and add a little detail, too. Let's start with the doors.

DOORS. The doors are about as simple as it gets in this project. They're just MDF panels cut to size and chamfered on the outside edges, as shown in the drawings at right. The doors are sized for a 1/16" gap in the middle and are inset from the edges (5/16" on each side).

The doors are attached to the case with concealed, surface-mounted hinges. They're simple to install and adjustable. You can use another jig to align the doors for attaching the hinges (box at right). A couple coats of paint and some pulls, as shown in detail 'b' are all that's left to complete the doors.

TRIM PACKAGE. I wanted to tie the cabinets together visually to the workbench and workstation. To do that, I added a solid-wood trim strip along the top edge, as in detail 'a.' Like the other edging, the trim has a chamfer along the upper and lower edges. If you plan to build several cabinets, you can use longer edging pieces to create a more seamless look for the cabinets.

While you wait for the second installment, I'm sure you'll find some projects to put your new shop space to use. W

How-To: HINGES

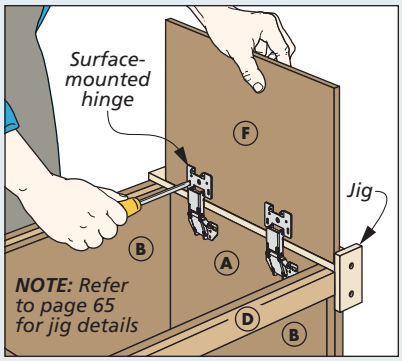

Door Jig. This jig aligns the door with the case bottom and spaces it out from the front of the case.

Materials, Supplies & Cutting Diagram (for one upper cabinet)

A Sides (2)	¾ MDF - 12 x 18	**E** Top (1)	¾ MDF - 12 x 24
B Subtop/Bottom (2)	¾ MDF - 12 x 23	**F** Doors (2)	¾ MDF - 11 11/16 x 17
C Cleats (2)	¾ x 3½ - 22½	**G** Trim (1)	¾ x 1½ - 24
D Fillers (4)	¾ x 1½ - 22½	• (8) #8 x 1½" Fh Woodscrews	

- (4) Surface-Mount Hinges w/Screws
- (2) Door Pulls
- (4) #14 x 1" Ph Sheet Metal Screws

1x4 - 96" Pine

1x2 - 36" Fir

***ALSO NEEDED:** One 49" x 97" sheet of ¾" MDF for one cabinet with enough material leftover to make additional parts for more cabinets*

Designer Project

Custom Music Stand

Treat the musician in your life with this great-looking and practical stand.

When it comes to playing a musical instrument, I'm all thumbs. But I'm fortunate enough to have two family members who both play an instrument in their community symphony. So when the idea for this sturdy ash and cherry music stand came along, I couldn't think of a better gift idea to give to each of them.

NO-NONSENSE DESIGN. This stand meets all of the criteria necessary for either a budding musician or a seasoned professional. Whether the musician is seated or standing, this stand is fully adjustable to accommodate. And it locks firmly in place with a couple of knobs. Likewise, the book plate that holds the sheet music pivots to ensure just the right angle for either position.

BEAUTIFUL LOOKS. But what's really striking are the graceful lines and the contrasting woods used to construct this stand. Best of all, the building procedure is pretty straightforward and will have you, or the musician in your life, playing a favorite number in no time.

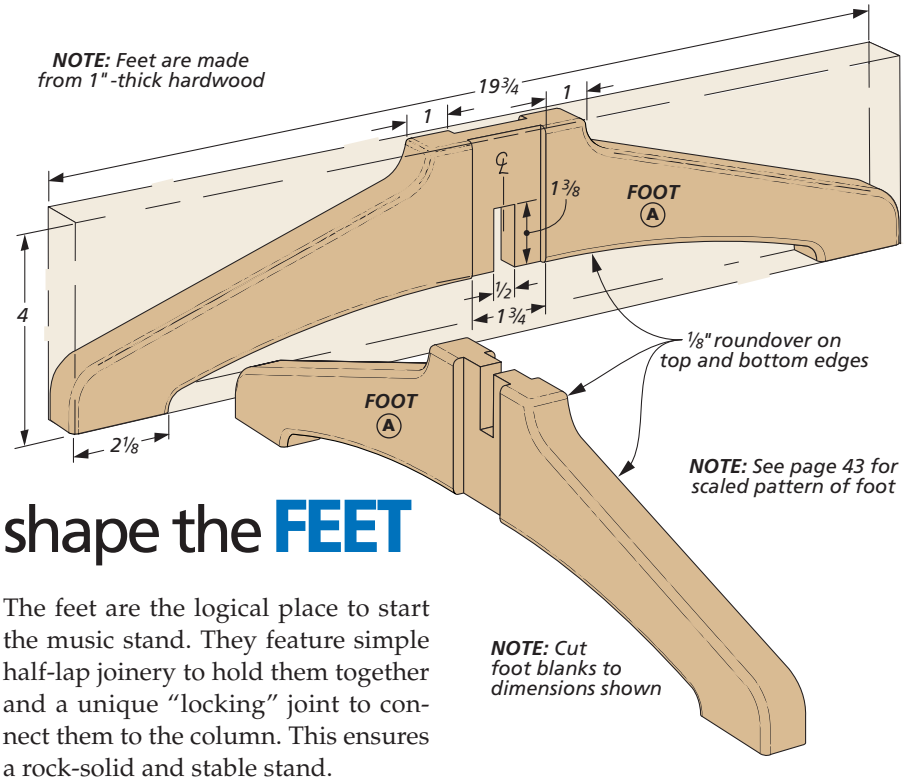

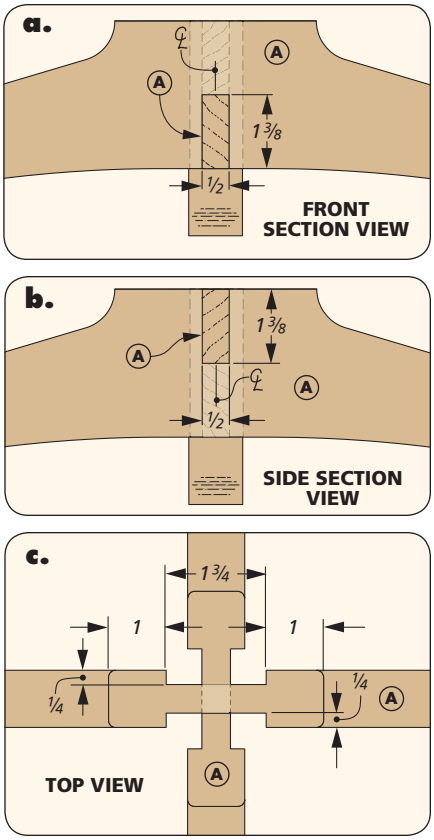

shape the FEET

The feet are the logical place to start the music stand. They feature simple half-lap joinery to hold them together and a unique "locking" joint to connect them to the column. This ensures a rock-solid and stable stand.

At first glance, cutting the joinery on the curved feet may look complicated. However, the trick is to make the bulk of these cuts with squared-up stock. So start by cutting two blanks to size using the dimensions shown above.

SHALLOW DADOES. Figure 1 shows the details for creating the wide dadoes on both sides of the each blank. When assembled, these dadoes create openings that lock the fixed column halves in place (detail 'c,' at right).

HALF LAPS. Next up are a couple of notches that create the half-lap joints to secure the feet together. One foot has the notch cut on the bottom edge (detail 'a') while the other foot needs a notch on the top edge (detail 'b').

Since an 8" dado blade won't extend high enough above the table to make the notch in the bottom edge of one foot, I used a standard 10" blade instead. After making a couple of cuts to define the shoulders of the notch, simply nibble away the rest of the material. The process for making the notches on the edges of both feet is shown in Figure 2.

SHAPE THE FEET. The pattern on page 43 can be used to cut the feet to shape. After transferring the pattern to each blank, make the cuts at the band saw as shown in Figure 3. Now rout a simple roundover on the edges (shown in the main drawing above) to complete the feet. Don't glue the feet together yet, though. You'll do that later when the column is added.

How-To: CUT & SHAPE THE FEET

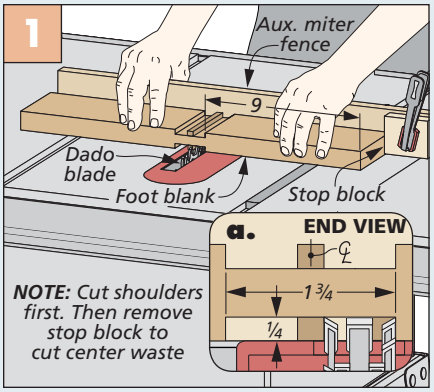

Shallow Dados. The dadoes on either side of each foot are easy to make using a dado blade and stop block.

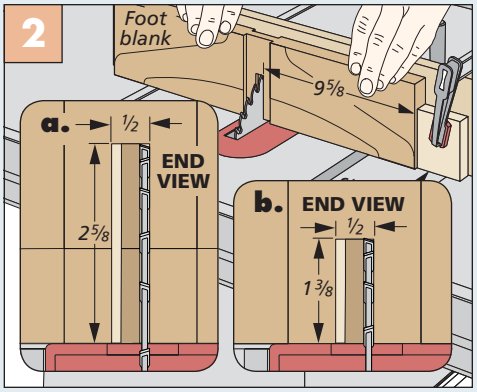

Cut Notches. Cut the deep notch in the edge of one foot first, then lower the blade to make the notch in the other foot.

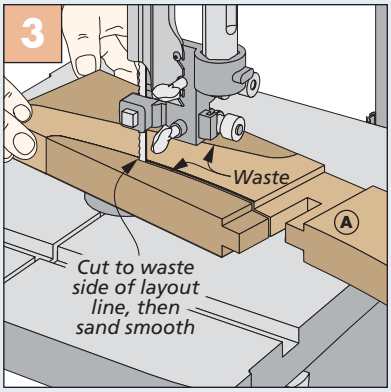

Cut to Shape. The band saw makes quick work of cutting the feet to final shape.

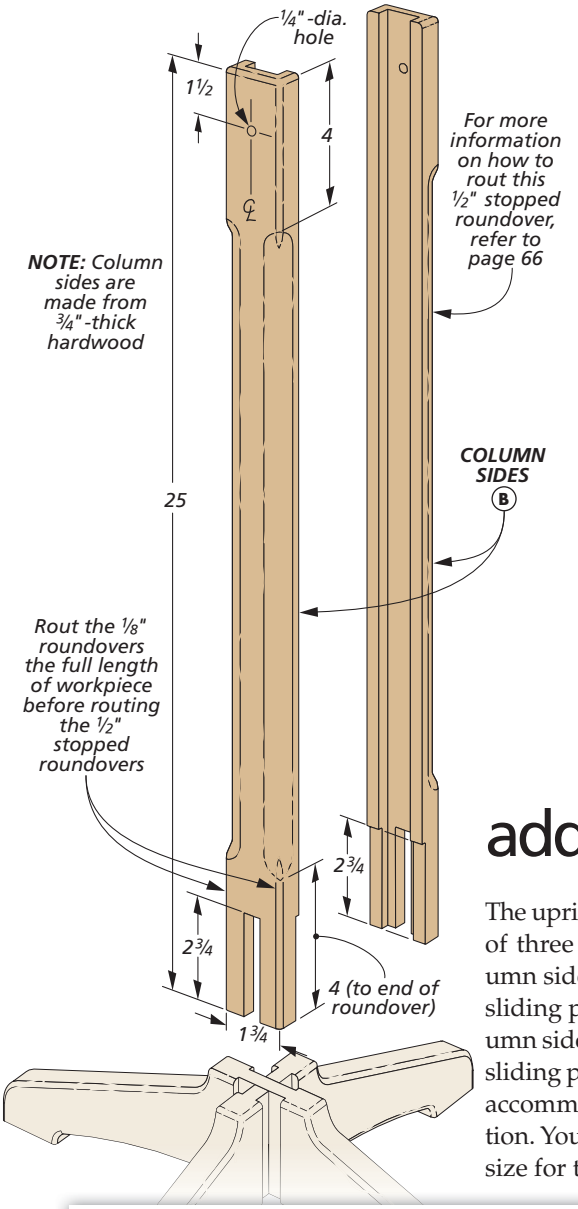

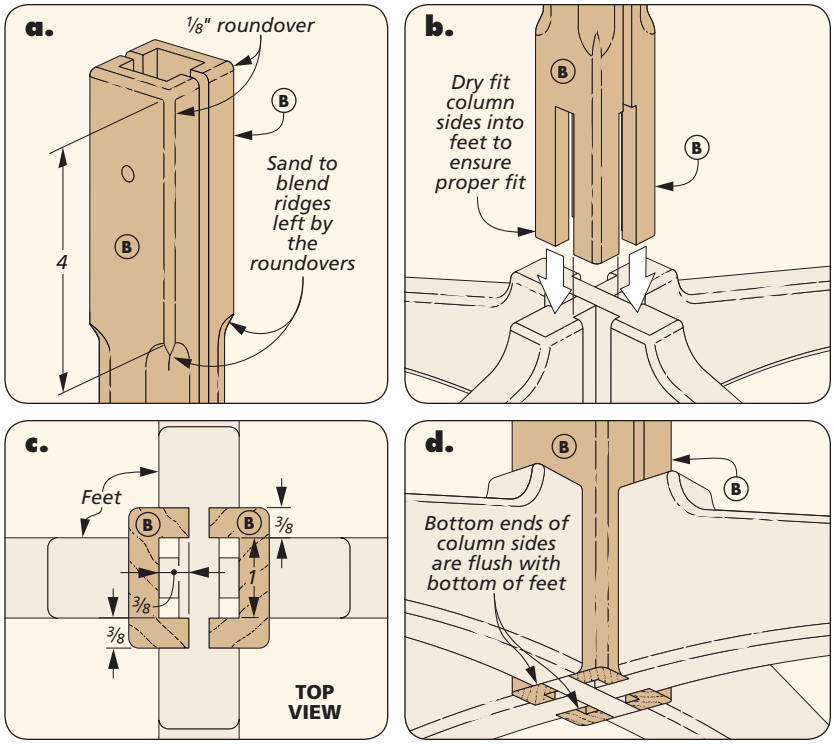

add the COLUMN ASSEMBLY

The upright column assembly is made up of three interconnected parts. Two column sides are attached to the feet, and a sliding post is clamped between the column sides when a knob is tightened. The sliding post can be moved up or down to accommodate a sitting or standing position. You'll start by cutting two blanks to size for the sides.

MATCHING NOTCHES. Just like you cut deep notches on the feet to form a half-lap joint, the column sides also have deep notches on their lower ends. These notches allow the column sides to slip into the grooves that are formed when the feet are assembled (detail 'b'). Figure 1 shows how to make these notches at the table saw using a tall push block and auxiliary rip fence.

How-To: CUT & SHAPE THE COLUMN SIDES

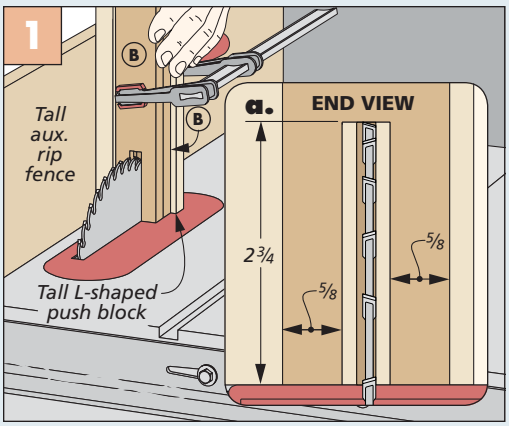

Notches. With both column sides clamped together, use a tall auxiliary rip fence and push block to create the notches at the bottom.

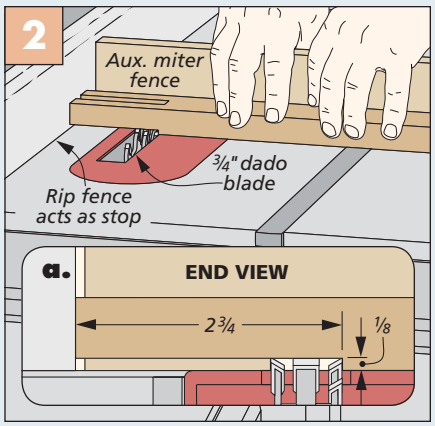

Shallow Rabbets. Use a dado blade to form the rabbet on the lower, inside face of each column side.

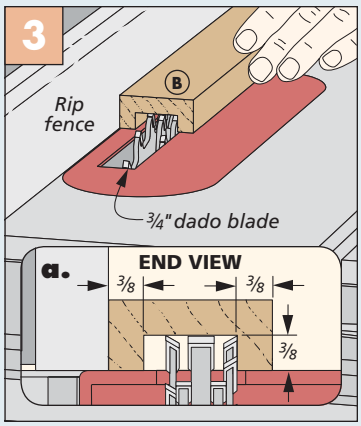

Grooves. Make two passes to form the centered groove on the inside face of each column side.

RABBETS & GROOVES. A couple more joinery operations are needed on the column sides to allow them to fit together with the feet. The How-To box at the bottom of the previous page shows the details. I'll just touch on these briefly.

A shallow rabbet on the lower end of each side is formed by making a series of passes over the dado blade (Figure 2). The centered groove that runs down the inside face of each piece also requires a couple passes over the dado blade, as shown in Figure 3.

Next up, I routed a slight roundover on the top and outside edge of each column side. To lighten the look of the column even more, I switched to a larger roundover bit (½") and formed the stopped roundovers you see in the main drawing on the previous page. (Turn to page 66 to see more about making these stopped roundovers.) The through holes for the knob assembly can then be located and drilled near the top of both workpieces.

SLIDING POST

The sliding post has a long slot that runs through the center, allowing the stand to be raised or lowered. A knob assembly passes through this slot to lock the post in position. To create the slot, I glued up several pieces to form this post. Make the pieces a little wide and then trim them to size after the glue dries.

SHOULDER DETAILS. As shown in details 'a' and 'b,' a narrow, radiused shoulder at the top of the sliding post accommodates the upper part of the stand later on. I used a 2" Forstner bit to form the shoulder on both sides of the post, as shown in Figure 1. After drilling out the shoulder waste, another shallow hole on either side of the post holds two rubber washers to provide extra grip (Figure 2). Now drill the through hole for the threaded rod and round over the top edges (detail 'a' above).

KNOB. Next, you need to make a knob assembly by installing inserts into the purchased knobs. Shop Notes on page 66 provides the details on making these.

ASSEMBLE. Finally, using the sliding post as a spacer, the column sides can be glued into the feet (detail 'c'). Remember to apply some glue to the half-lap joint in the feet, as well.

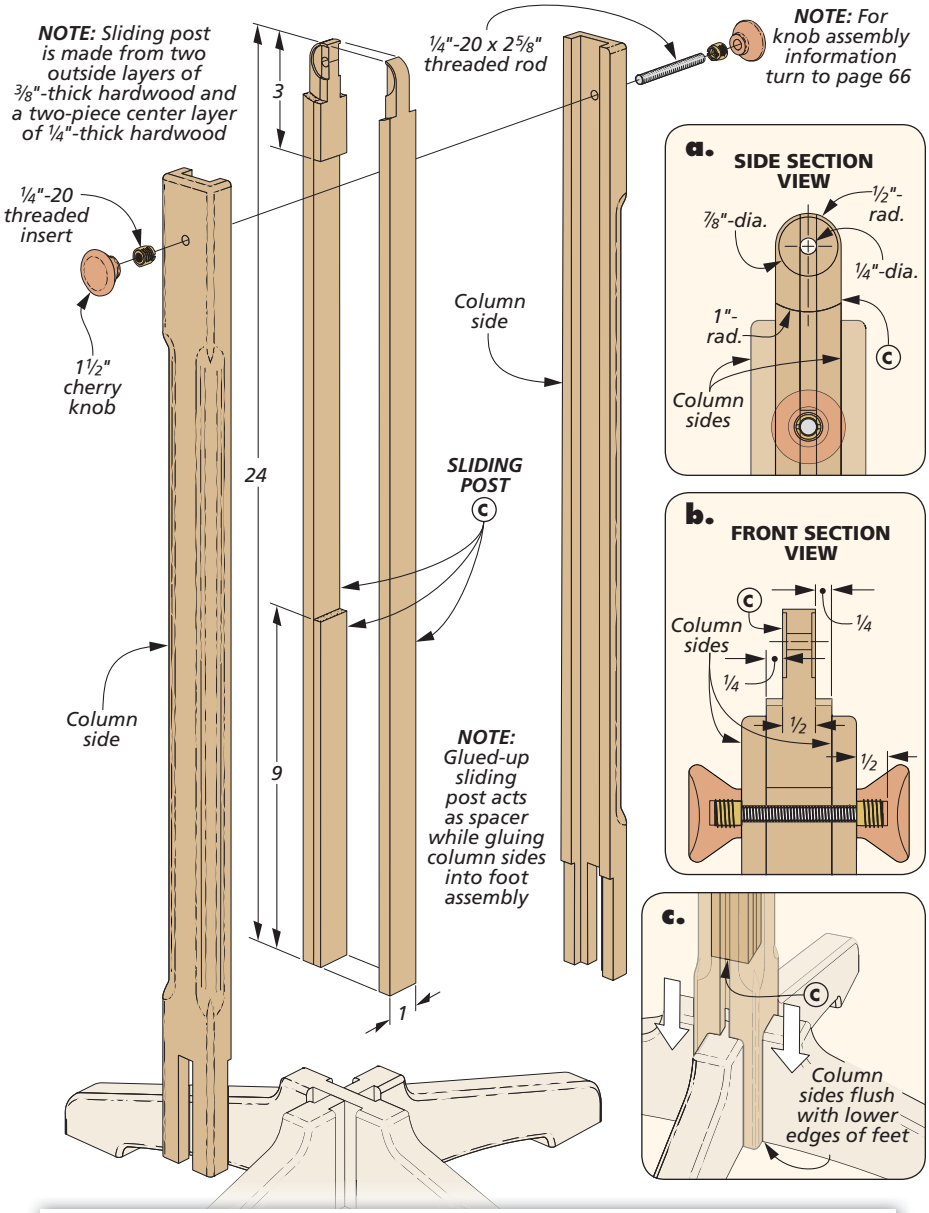

How-To: FORM THE SLIDING POST SHOULDERS

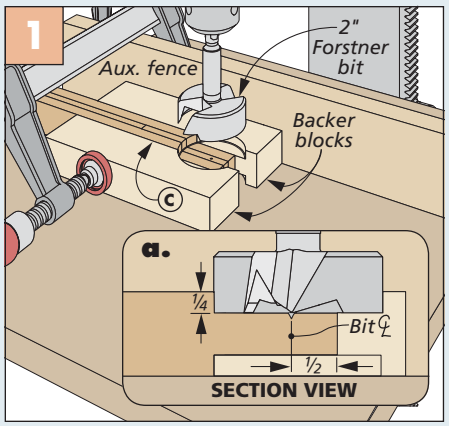

Large Holes. Clamp a couple backer blocks on either side of the post before drilling the holes that form the shoulders.

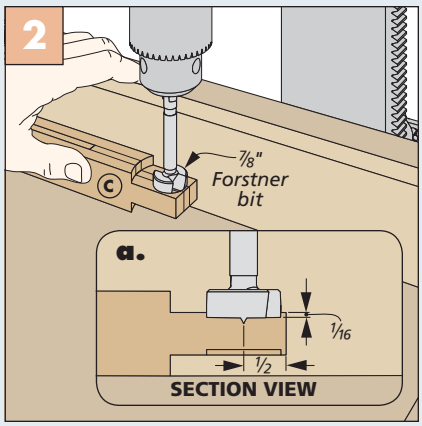

Hole for Washers. A shallow hole on both sides of the sliding post provides space for rubber washers.

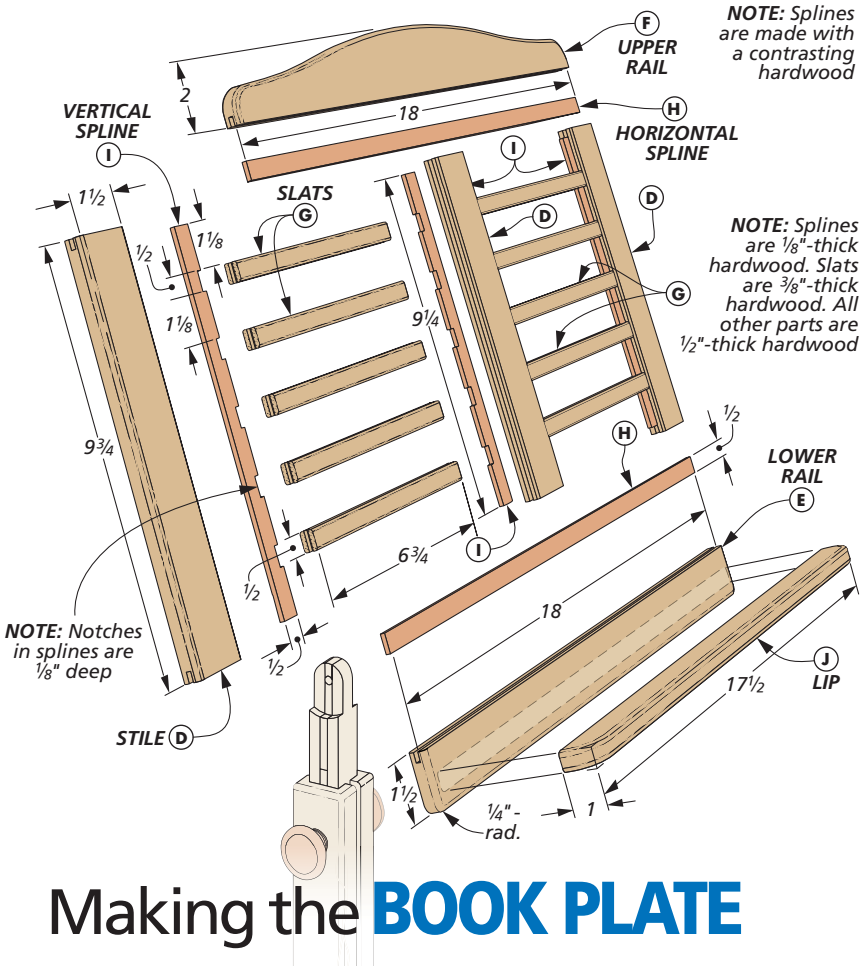

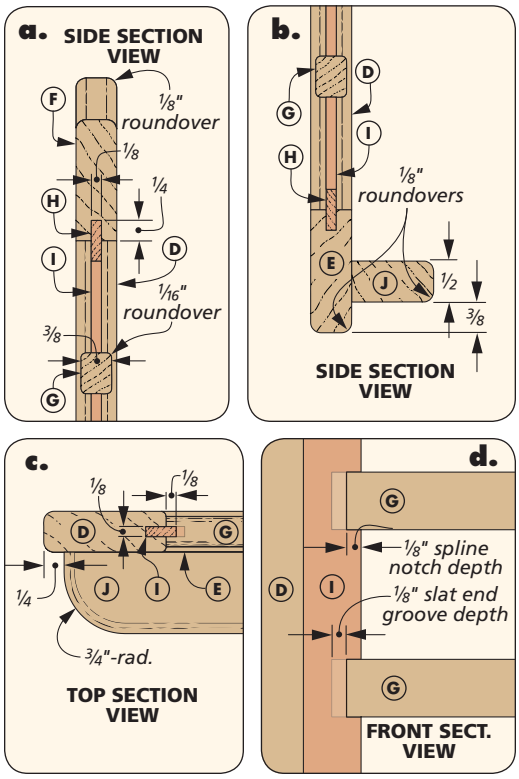

Making the BOOK PLATE

Since the book plate is the focal point of the music stand, I wanted a design that was both attractive and functional. The design you see above is the result. It features a simple rail and stile construction and is held together with narrow splines made from a contrasting wood (I used cherry). The slats lock in place against the notched vertical splines to create a delicate, but solid, platform.

STILES & RAILS. The first order of business is to cut blanks to size for the three stiles and the two rails. (Leave the upper rail square for now.) Figures 1 and 2 below show the process for cutting a narrow groove along the edges of the stiles and rails, as well as the ends of the stiles. These grooves hold the splines later on. I used a 1/8"-thick blade in my table saw to make these grooves. Be sure to register the same face of each workpiece against the rip fence when making these cuts. This ensures that the parts align properly when the splines are added.

SLATS. To make the slats, I started with a couple of wide blanks (Figure 3, below)

How-To: CUT GROOVES & MAKE SLATS

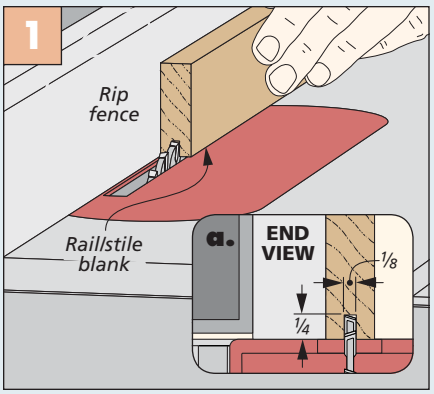

Edge Grooves. Register the same face of all the stiles and rails against the rip fence when cutting the edge grooves.

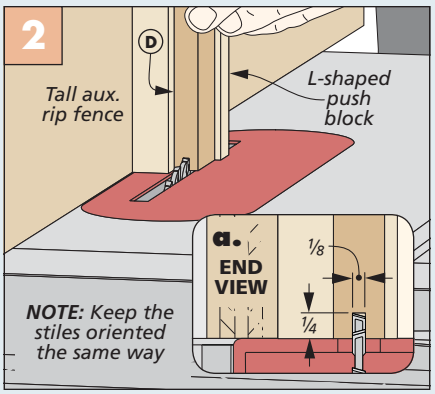

Cutting End Grooves. Use a tall push block to support the stiles as you cut the grooves along each end.

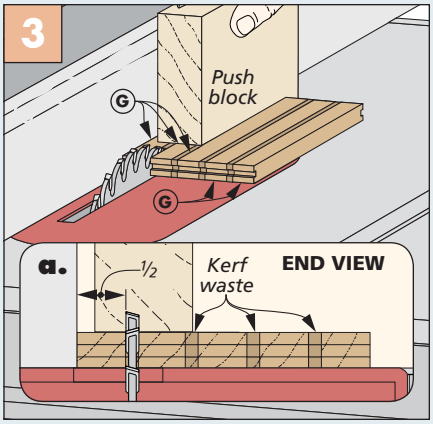

Rip Slats. After cutting the grooves in the ends of the slat blanks, rip the slats to width at the table saw.

and made a groove along each end (just like the stiles) before ripping the slats to width. I then eased all four edges of each slat with sandpaper (detail 'a' and 'b' on the previous page).

SHAPING THE RAILS. The bottom corners of the lower rail are rounded (main illustration on the opposite page), but the upper rail has a gentle curve on its top edge. Use the pattern on page 43 to lay out the curve and cut it to shape at the band saw, as shown in Figure 1 at right.

SPLINES. Next up are the splines. These are cut to size from ⅛"-thick stock. The four vertical splines have notches along one edge that interlock with the grooves on the ends of the slats. Figure 2 shows how I made these cuts at the table saw.

ASSEMBLE THE BOOK PLATE

Bringing the parts of the book plate togther isn't complicated by any stretch. But having everything organized and within easy reach will make the process go much more smoothly. Now's a good time to do a "dry run" to ensure that all of the parts fit tightly together.

I also took one more step to guarantee a successful glueup. And that was to make an assembly board to register the parts and keep everything square during assembly. This assembly board is simply a smooth piece of ¼" hardboard with a couple cleats glued perpendicular to one another along two edges, as shown in Figure 5.

GLUE IT UP. With the test fit done and the assembly board ready to go, start by gluing the splines in position in the rails (Figure 3) and the stiles (Figure 4). Give these parts a little time to let the glue set up before removing the clamps.

Use the assembly board to bring the rest of the parts together (Figure 5), working from one corner to the opposite corner adding glue to the individual parts as you go. After adding the upper rail, a few clamps hold everything in place (Figure 6).

DETAILS. After the glue dries, you'll round over the front and back edges. The final piece of the book plate is the lip. Cut it to size, round over the corners, and ease the outside edges. The lip gets glued and clamped to the lower rail (details 'b' and 'c,' previous page).

How-To: CUT SPLINES & BUILD BOOK PLATE

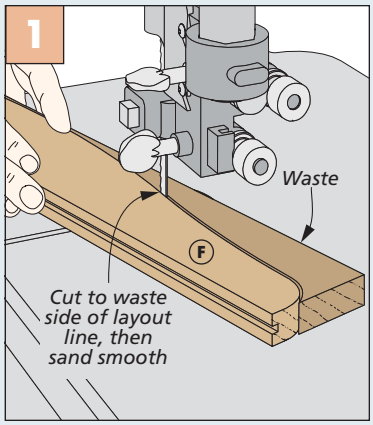

Curved Top Rail. Lay out the curve on the top rail and cut it to shape at the band saw.

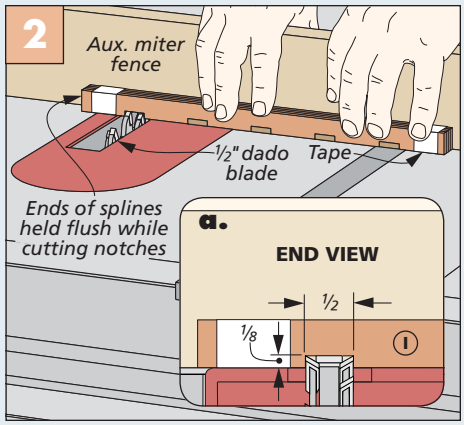

Notches in Vertical Splines. Cutting the notches in the vertical splines all at once ensures a uniform alignment.

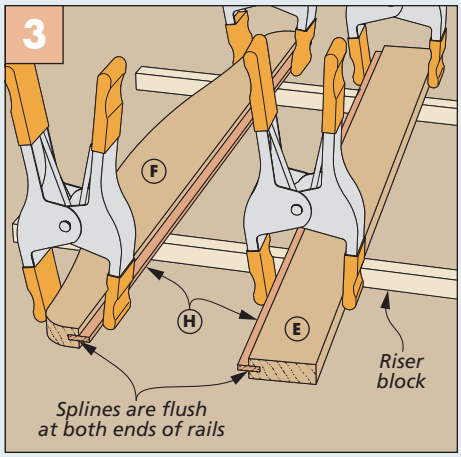

Horizontal Splines. With the ends flush, glue and clamp the horizontal splines in place in the top and bottom rails.

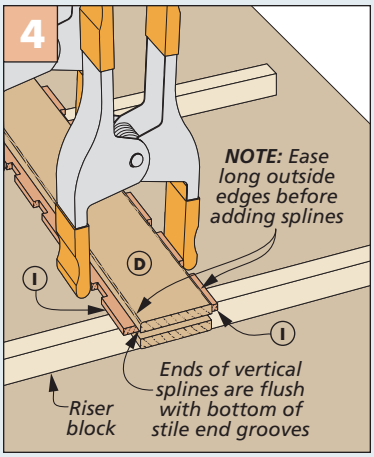

Add Splines to Stiles. Glue the vertical splines in position in the center and outer stiles as shown.

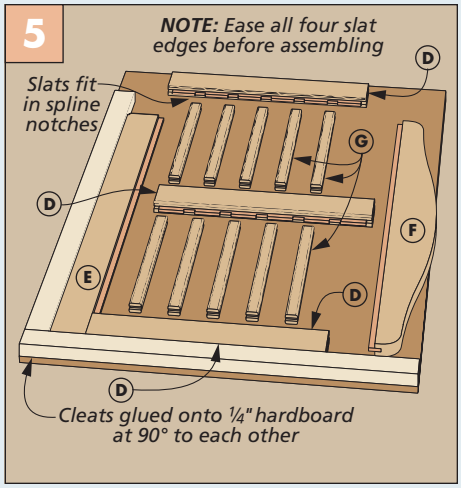

Assembly Board. Working from right to left and bottom to top, bring the book plate parts into position.

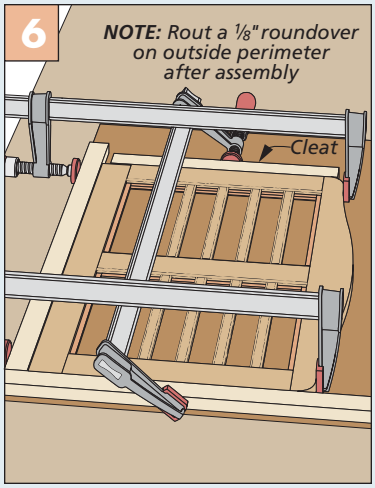

Add Clamps. With all of the parts glued together, use a few clamps to secure the book plate.

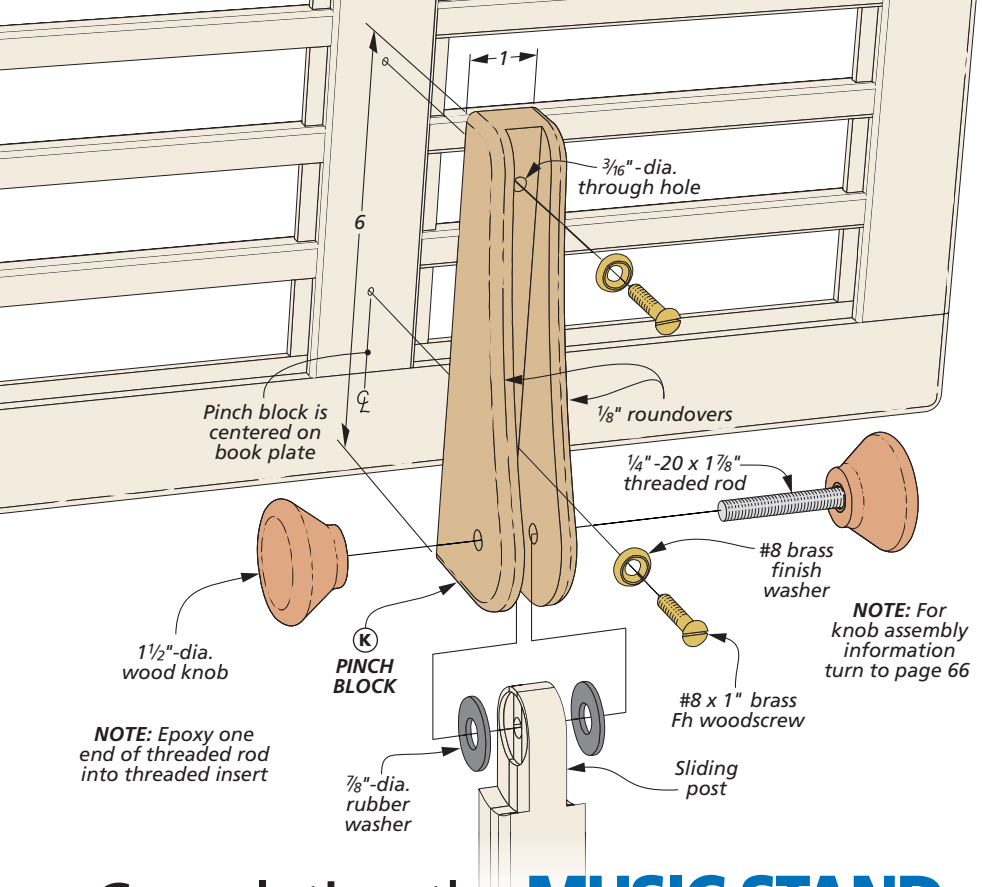

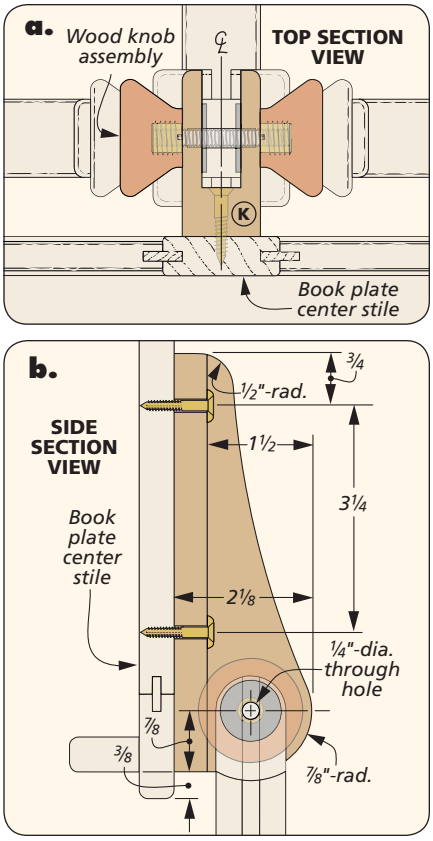

Completing the MUSIC STAND

The music stand is now on the home stretch. Only one more part is needed to connect the book plate to the sliding post. And that's the pinch block shown above. It's attached to the back of the book plate with screws and slips over the top of the post. Another knob assembly locks it in place. A couple of rubber washers between the pinch block and sliding post ensure that the book plate won't slip when in use.

MAKE THE PINCH BLOCK. Use the pinch block pattern on the next page to cut a blank to size. Then use the dimensions shown in detail 'b' above to locate and drill the through hole for the knob assembly. The How-To box below provides the details for the remaining operations needed to complete the pinch block. I'll just point out a few things.

First, the deep groove on the back of the block needs to be centered on the edge of the workpiece so that you end up with two equal thickness "tabs." To ensure the groove is centered, I used a 1/4" dado blade and made several passes, flipping the block end-for-end

How-To: SHAPING THE PINCH BLOCK

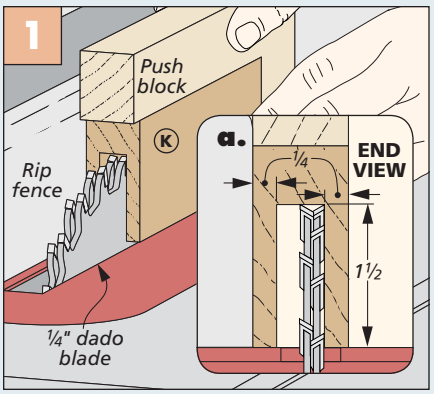

Groove. Cut a centered groove by flipping the workpiece between passes and adjusting the rip fence.

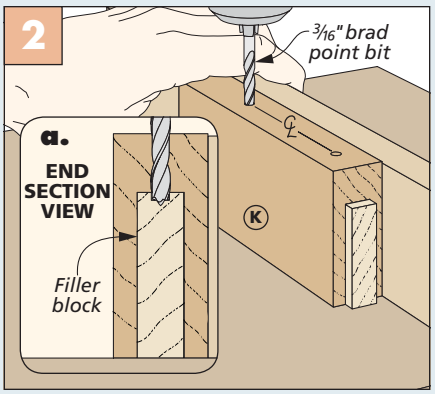

Mounting Holes. Use a filler block when drilling the mounting holes to prevent tearout on the inside.

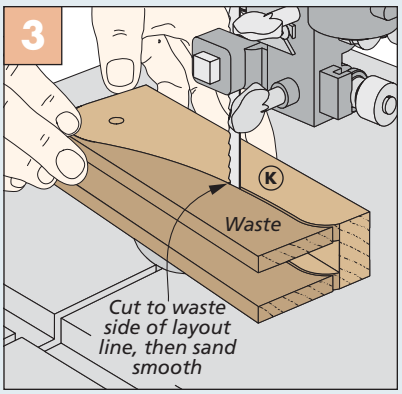

Cut to Shape. Use the pattern on the next page to lay out and cut the block to shape at the band saw.

LAYOUT PATTERNS

NOTE: Enlarge foot pattern 200%

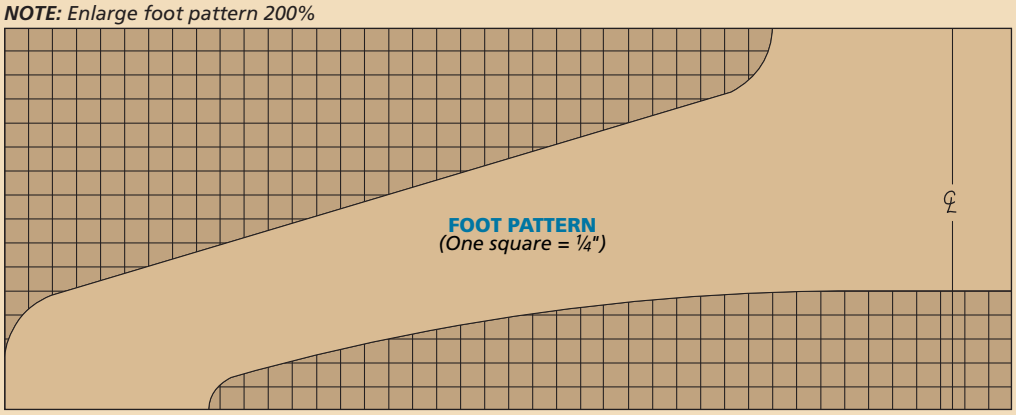

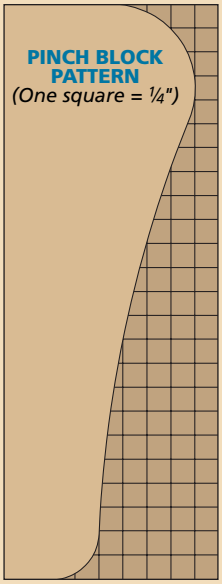

NOTE: Enlarge pinch block pattern 200%

NOTE: Enlarge top rail pattern 200%

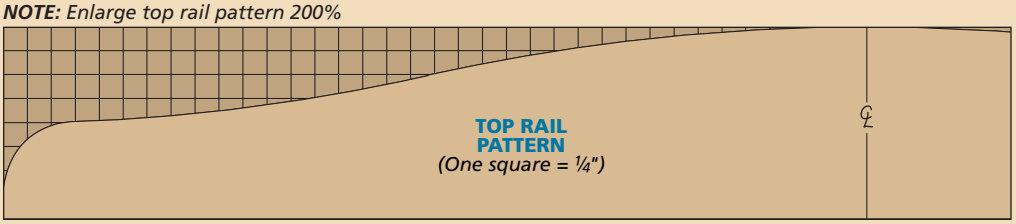

Woodsmith GO ONLINE EXTRAS — For full-size patterns, go to Woodsmith.com

between them (Figure 1). Check the fit of the pinch block by placing it over the shoulder at the top of the sliding post (don't forget to have the rubber washers in place). Readjust the rip fence and make a couple more passes over the saw blade if necessary. You're aiming for a snug fit between the parts.

After drilling the two mounting holes in the front of the block as shown in Figure 2, you can use the pattern at the top of the page to lay out the pinch block profile. It can then be cut to shape at the band saw (Figure 3). Finally, round over the outside edges of the pinch block at the router table.

ATTACH PINCH BLOCK. Connecting the pinch block to the back side of the book plate is pretty straightforward. Lay the book plate face down on your workbench and position the pinch block against the middle stile as shown in detail 'b' on the previous page. To create a pleasant appearance, I used brass finish washers and screws to hold things together.

ONE MORE KNOB ASSEMBLY. To hold the book plate to the top of the sliding post, you'll need to make another knob assembly. It's made like the previous one, just with a shorter section of threaded rod.

FINAL DETAILS. All that's left is to slip the book plate assembly in place over the top of the sliding post and lock it in position with the knob assembly. And before putting this music stand to use, you'll want to give it a durable, protective finish. To see how I finished my ash and cherry music stand, turn to Sources on page 67. After that, this project is ready for its first concert, symphony, or even rehearsal. However it's ultimately used, this music stand is sure to provide a lifetime of service to some lucky musician. W

Materials, Supplies & Cutting Diagram

A	Feet (2)	1 x 4 - 19¾	**J**	Lip (1)	½ x 1 - 17½
B	Column Sides (2)	¾ x 1¾ - 25	**K**	Pinch Block (1)	1 x 2⅛ - 6
C	Sliding Post (1)	1 x 1 - 24			
D	Stiles (3)	½ x 1½ - 9¾	•	(4) 1½"-dia. Knobs	
E	Lower Rail (1)	½ x 1½ - 18	•	(1) ¼"-20 x 6 Threaded Rod	
F	Upper Rail (1)	½ x 2 - 18	•	(4) ¼"-20 Threaded Inserts	
G	Slats (10)	⅜ x ½ - 6¾	•	(2) #8 Brass Finish Washers	
H	Horizontal Splines (2)	⅛ x ½ - 18	•	(2) #8 x 1" Brass Fh Woodscrews	
I	Vertical Splines (4)	⅛ x ½ - 9¼	•	(2) ⅞"-dia. Rubber Washers	

1" x 5½" - 72" Ash (3.4 Bd. Ft.)

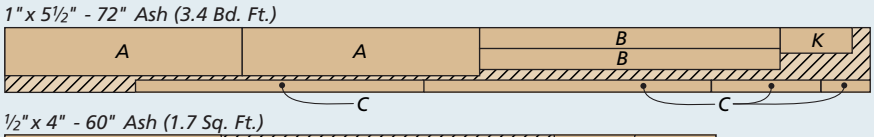

½" x 4" - 60" Ash (1.7 Sq. Ft.)

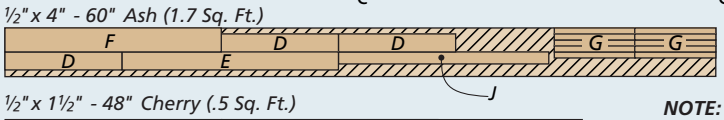

½" x 1½" - 48" Cherry (.5 Sq. Ft.)

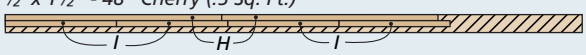

NOTE: Parts B, C, G, H, and I are planed to final thickness

Heirloom Project

Traditional Wall Clock

This sophisticated, but simple-to-build, pendulum clock is sure to be a treasured possession in your family for generations.

Building a clock is a project on the bucket list of many woodworkers. Quite often, an heirloom like a grandfather clock is one of the first projects they imagine themselves building when they have the time and skill to do so.

A HAPPY MEDIUM. The only problem is, building a full-size grandfather clock requires a large investment of time, money, and materials. Simply put, the scale and cost of the project has a tendency to scare off some woodworkers. That's why I was pleased to see this clock design a few months ago. I felt it offered the perfect balance of great-looking features, such as curved doors and moldings, an elegant glass front, and a working pendulum. At the same time, the scale of the clock, as well as the simple techniques required to build it, make it an approachable project for anyone who's interested in trying their hands at a clock.

THE HEIRLOOM FOR YOU. So if you've always wanted to build your own heirloom clock, then I'd suggest giving this one a go. The attractive walnut case and door are easy to put together with basic joinery techniques. And the clock components are simply installed on a separate "movement board" that's held securely in place with magnets.

On the other hand, the built-up, curved molding pieces, the arched door, and even the attractive stencil on the glass panel provide some unique challenges. By the end, you'll have truly earned your one-of-a-kind heirloom.

Construction Overview / OVERALL DIMENSIONS: 12¼"W x 22¹¹⁄₁₆"H x 5½"D

Curved top molding is cut at the band saw and shaped at the router table

NOTE: Refer to page 67 for hardware sources and finishing information

Molding backer fills space behind front molding

Moldings mitered to fit around top and glued and screwed in place

Brass hangers allow easy wall mounting

Plywood back panel encloses clock case

Magnets secure movement board within case and allow easy removal

Walnut clock case features tongue and dado joinery

Built-up bottom moldings made up of three frames glued to bottom of clock case

Decorative stencil on the door created with etching cream (page 64)

Door assembled with lap joints and features a curved top rail

Quartz clock movement features built-in chime and add-on pendulum

◄ The arched, profiled top molding is the crowning touch on this heirloom clock. Refer to page 49 to see how it's done.

Start with the CLOCK CASE

The hardwood case that houses this wall clock is built similarly to many other cabinets, but on a smaller scale. Simple tongue and dado joinery is used to connect the parts with one another.

PREP THE CASE PARTS. As you're cutting the case sides, bottom, and top to their finished dimensions, take note of the different widths of the parts indicated in the drawings on the right. The sides are wider than the bottom to allow the back panel to fit in a rabbet later on. And the case top is narrower than the bottom to allow room for the clock's movement board at the front.

CASE JOINERY. Once they're all cut to size, you can get to work on the case joinery. Start by cutting narrow dadoes near the ends of the case sides (Figure 1). Use a combination blade to prevent chipping across the grain. Now set up a dado blade and auxiliary fences, and cut mating tongues in the top and bottom (Figure 2). Sneak up on the cut until the tongues fit the dadoes nicely.

By adjusting the auxiliary rip fence setting and the dado blade height, making the rabbets in the back edges of the case sides goes pretty quickly (refer to Figure 3). Finally, stand the sides on edge in order to shave out the shallow mortises for the door hinges, as in Figure 4.

DRILL HOLES & ASSEMBLE. You'll note there are a few holes in the case sides. Specifically, both sides have matching holes for magnets that will hold the movement board later on. One of the sides has an extra hole for a magnetic door catch. Since the case is so small, it would be difficult to drill these pilot holes after the case is assembled. So it's a good idea to take care of them now. Then glue and clamp the case together. When that's done, fill the small slot at the front of each side with a thin wood plug (detail 'b' above).

BASE MOLDING

The molding at the bottom of the case features upper and lower bullnosed frames that sandwich a middle molding

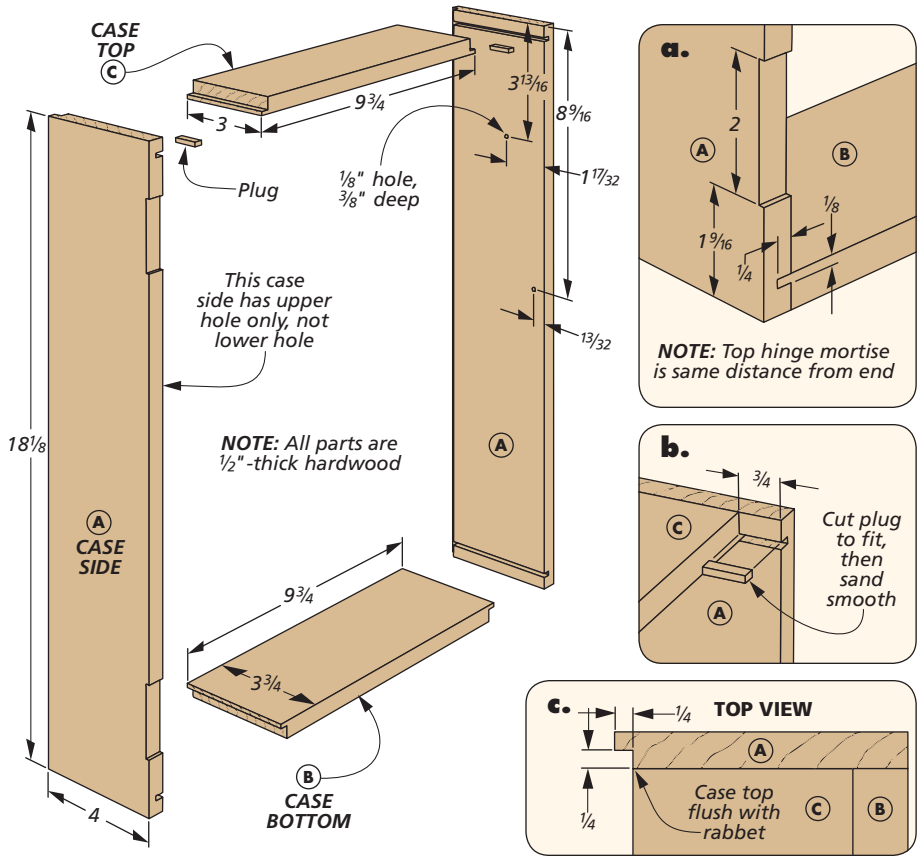

How-To: CASE DETAILS

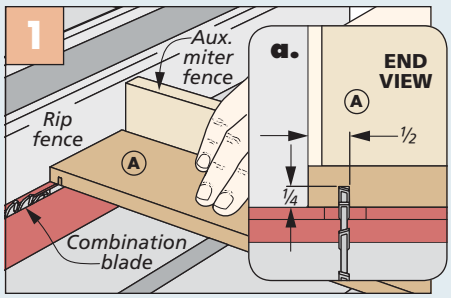

Dado. A standard-sized table saw combination blade takes care of the dadoes in the clock case sides.

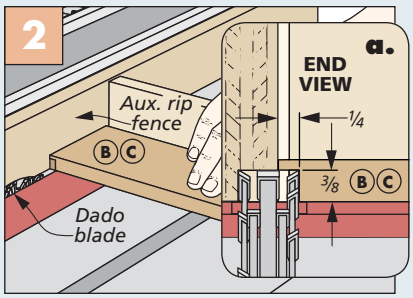

Tongue. With a dado blade buried in an auxiliary fence, sneak up on the thickness of the tongue for a nice fit.

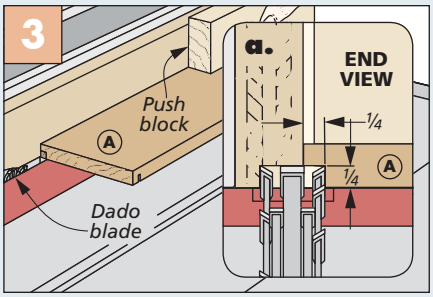

Rabbet. Adjust the fence and blade height settings in order to trim the rabbet along the back edge of the case sides.

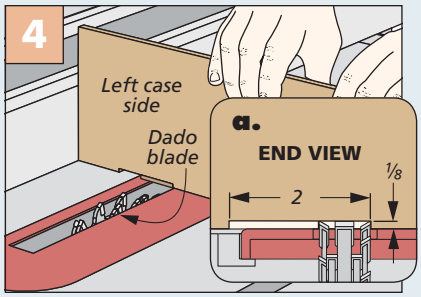

Hinge Mortises. A few quick passes with the case sides on edge take care of the hinge mortises.

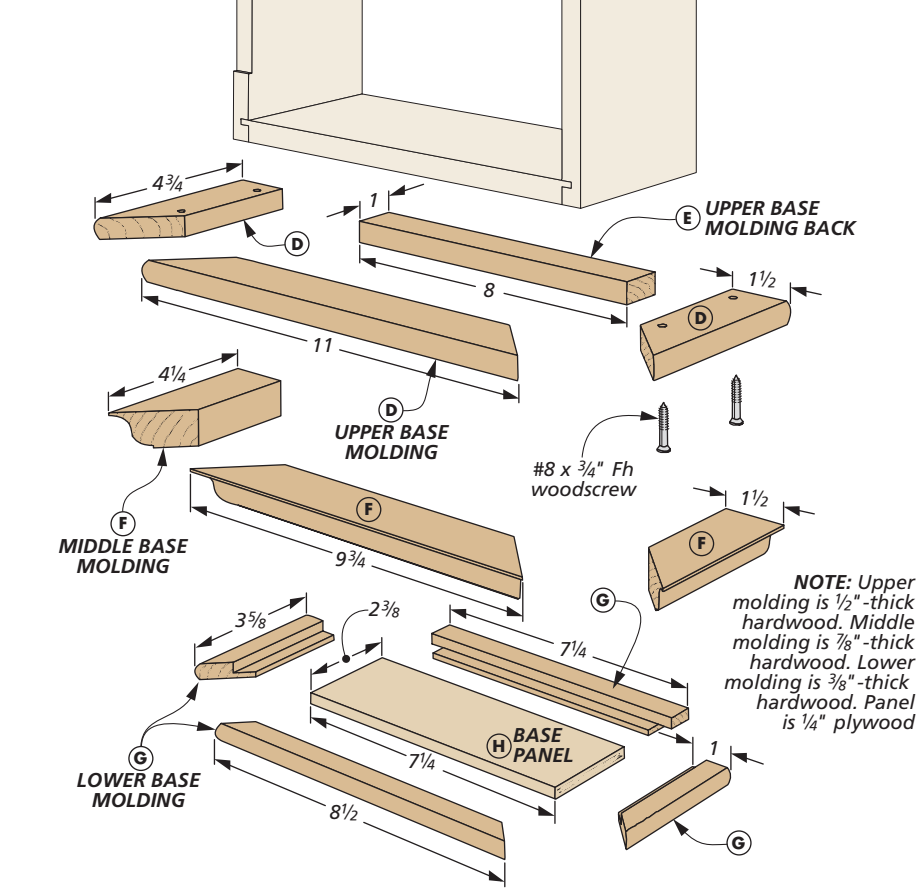

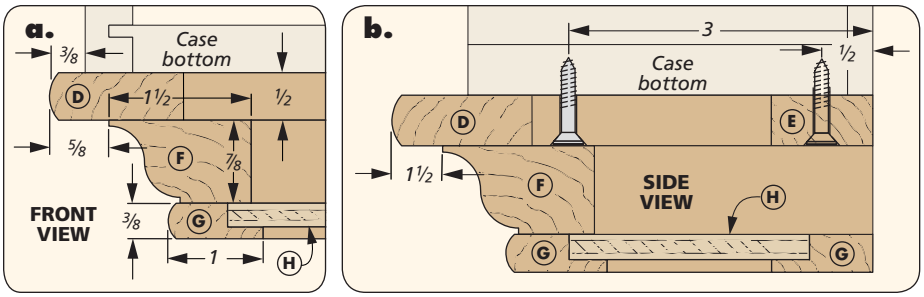

with an ogee profile. To create the base molding, I worked my way from top to bottom, completing one layer and adding it to the bottom of the clock case before moving down to the next.

UPPER BASE MOLDING. The upper base molding is a set of mitered front and side pieces with a back piece cut to fit between the sides. After gluing and clamping them together, I routed the partial radius bullnose on the front and sides (Figure 1 at right). Then I glued and clamped the frame to the case. Added screws provide a secure hold.

MIDDLE BASE MOLDING. The middle molding is made up of three thick parts with an ogee profile. To make it easier and safer to rout the large ogee, I cut it on the edge of a thicker blank first before ripping the blank to its final thickness (Figure 2). Then miter the parts, add glue to the ends, and hold them together by hand until the glue tacks up. After that, apply glue to the top edges of the moldings before gluing and clamping them to the upper base molding.

LOWER BASE MOLDING. That just leaves the lower base molding assembly. In addition to the bullnose profile along the front and sides, it also has rabbets along the inside edges to accept a plywood panel. This gives the bottom of the clock a finished look.

As indicated in Figure 3, I cut the rabbets first before mitering the parts to fit together. For the back piece of this frame, you'll need to rabbet both the front edge and ends as shown in the drawings above. Then I assembled the frame before routing the bullnose. Figure 4 has the bullnose details. Finally, glue and clamp the lower base molding in place.

How-To: MOLDING

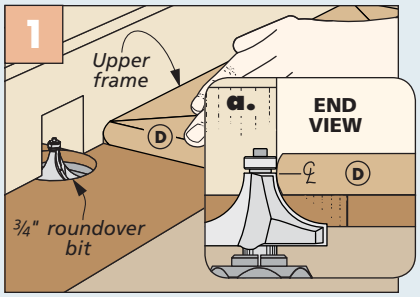

Bullnose. Center a roundover bit and make two passes to complete the partial bullnose profile.

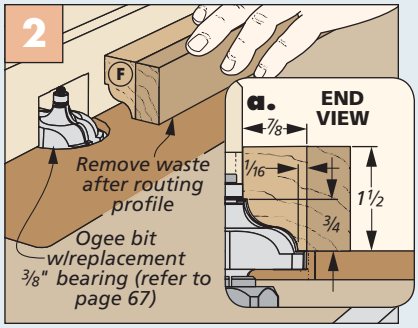

Ogee. This ogee bit is large, so step down the router speed and make a series of progressively deeper passes.

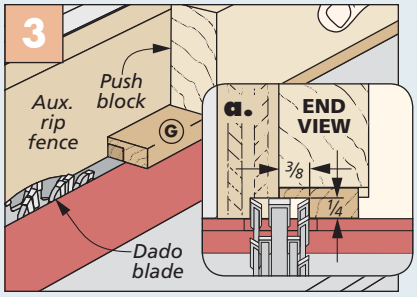

Rabbet. Use a push block for safety while cutting the rabbets on the small lower molding parts.

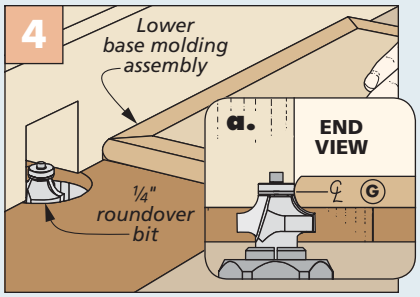

Lower Bullnose. The lower base molding frame is thinner, so use a smaller diameter bit for the bullnose.

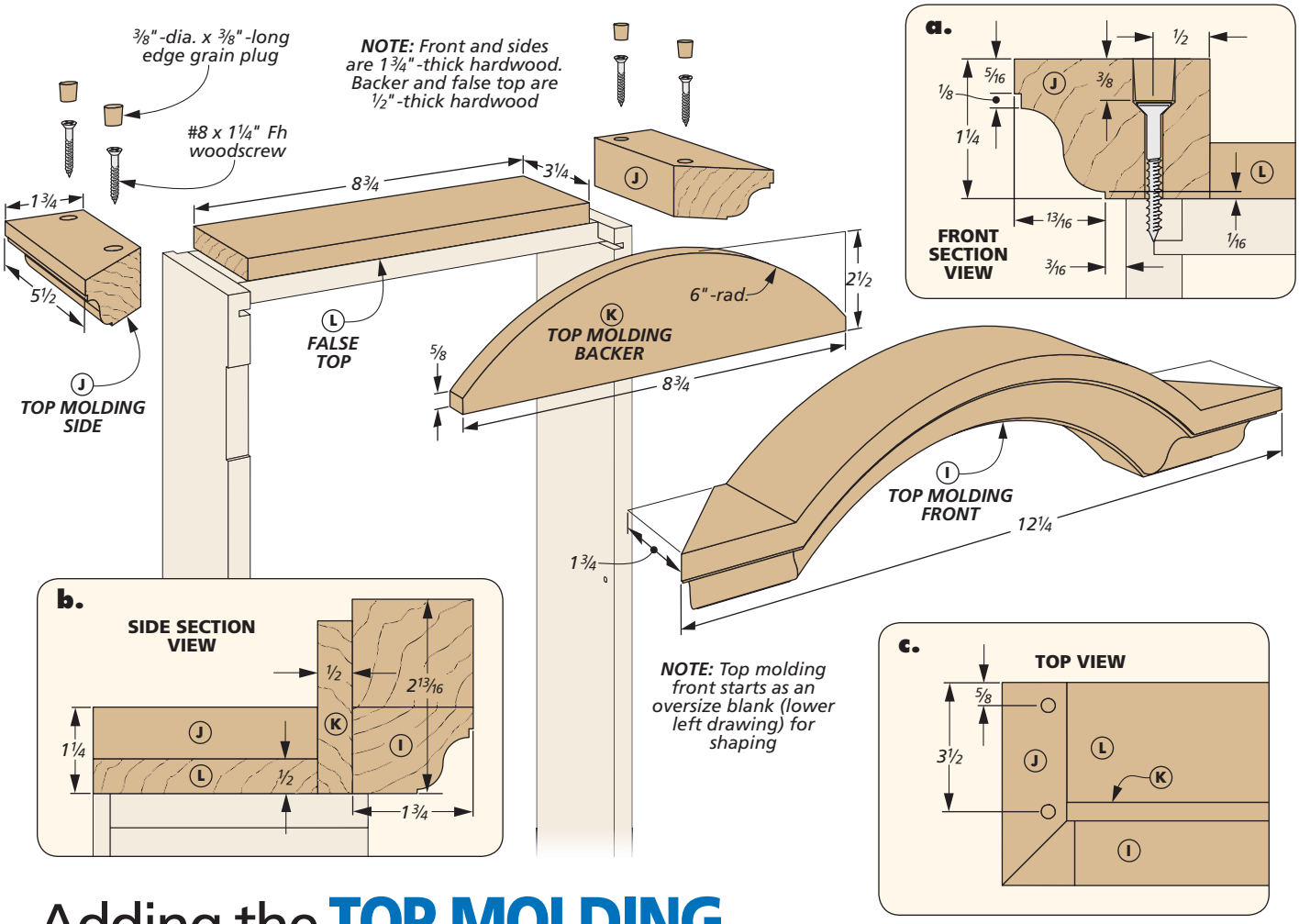

Adding the **TOP MOLDING**

With its distinctive front arch and large ogee profile, the clock's top molding is certainly an attention-getter. Fortunately, it's not too difficult to make by taking a step-by-step approach to the process.

THICKER PARTS. One thing you'll note is that the top molding pieces are much thicker than the other parts of the project. Specifically, I used 8/4 stock for the front and sides. While prepping the parts for the molding, I also left the blanks a little wide and long for starters (refer to the drawing below). This left me with some wiggle room for cutting the miters and getting the shaping of the parts just right before trimming them to final size later on.

SHOP-MADE TRAMMEL. As you're shaping the parts for this top molding, you'll note that cutting three different radii are involved — one for the inside radius of the front molding, one for the outside radius of the front molding, and a third for the molding backer piece. I crafted a simple trammel that allowed me to lay out the radius for each of the three cuts (Figure 1 on the next page). For more information on this shop-made trammel, refer to page 65.

START THE SHAPING. After laying out the curved cuts, you might think the next order of business is to cut the pieces to their final shape. However, I wanted to have a wide workpiece to hold onto while routing the curved ogee profile at the router table. For that reason, I only cut the inside radius first, as shown in Figure 2 on the next page. You'll want to sand it completely smooth before moving on.

OGEE PROFILE. At this point, it was time to head to the router table for adding the ogee profile to the front molding. You might recognize the profile and router bit from the middle base

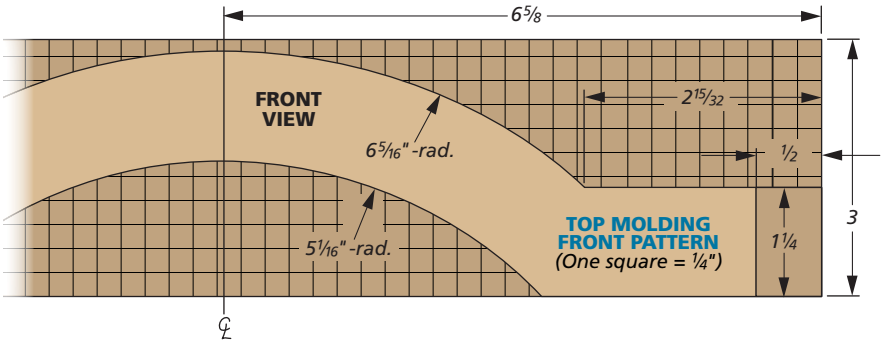

molding shown on page 47. Since the piece is curved, you'll have to guide the cut using just the router bit's bearing, rather than the router table fence. Like the molding made earlier, step the speed of the router down (around 12,000 rpm) and make a series of lighter passes until arriving at the final profile.

To start the cut, you'll have to carefully pivot the workpiece into the spinning router bit. This can be a little bit tricky, but I began with the workpiece extra-long for just this reason. This provided me with flat starting and finishing points at the ends of the molding in order to make the cut without being too worried about the ends being perfect. Figure 3 below has the details.

COMPLETE THE FRONT MOLDING. As shown in Figure 4, completing the outside radius of the front molding is a two-part process. You have straight shoulder cuts at the ends, followed by the radius to cut at the center. It's possible to cut these shoulders at the band saw by guiding the molding along the fence, but I cut them at the table saw for a little more precision. I'll show you how I did it in Shop Notes on page 65.

Once that's done, complete the outside radius cut as indicated in Figure 4. Then sand the front molding smooth, and miter the ends at the table saw as shown in Figure 5.

TOP MOLDING SIDES. Now that you've successfully completed the elaborate top molding front, the top molding sides should be a breeze. They have the same large ogee profile on them as the front molding, but since these pieces are straight, I used the router table fence to guide the cut (Figure 6). As you can see, I started with a longer blank and then mitered the pieces to final size after completing the profile. At that point, glue and clamp the three molding pieces together, and then glue and screw them to the top of the clock case as shown in the main drawing on the previous page. I made some walnut plugs using a plug cutter to fill the screw holes.

MOLDING BACKER. At this stage, you have an open hole where daylight shows through on your arched front molding piece. But this is easy to fix by adding a front molding backer piece. After cutting it from hardwood, I laid out the radius at the top using the trammel shown in Figure 1. Then I cut it at the band saw before gluing and clamping it to the backside of the front molding piece.

FALSE TOP. There's just one more piece to add to the clock case before moving on to the door, and that's the false top. And it's the easiest part of all, as it's simply cut to size to fill the opening left at the top of the case. The one thing you'll want to note is that it aligns flush at the back with the case sides, not the case top (detail 'b', previous page). Later on, you'll add hardware to this piece to help hold the back panel in place.

How-To: SHAPE THE TOP MOLDING

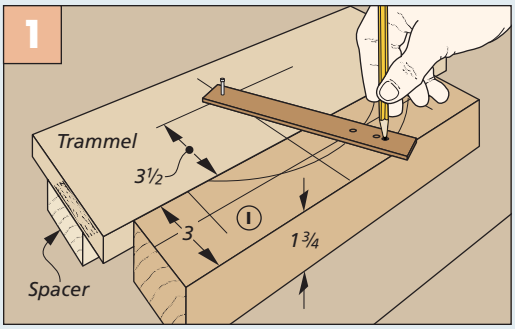

Shop-Made Trammel. This simple trammel is handy for laying out the different radii on the molding parts. More details are on page 65.

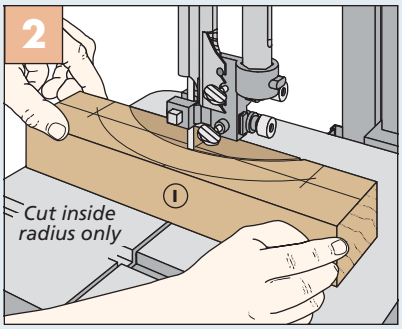

Inside Radius. The front molding's inside radius is a simple band saw cut. Sand it smooth afterward.

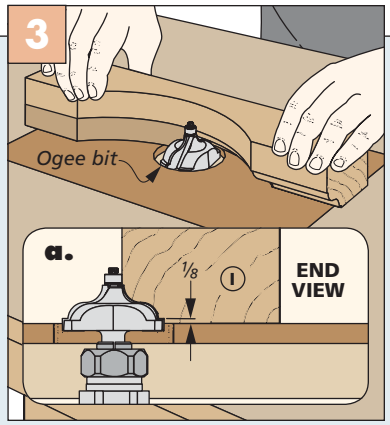

Ogee. Using the bearing as a guide, make a series of gradually deeper passes to rout the ogee.

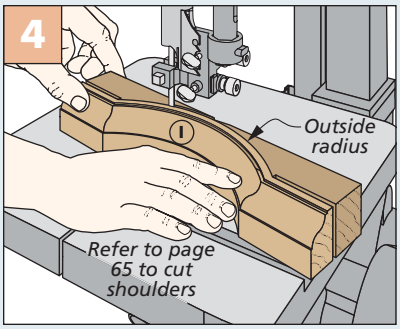

Outside Radius. After forming the shoulders (page 65), cut the outside radius at the band saw.

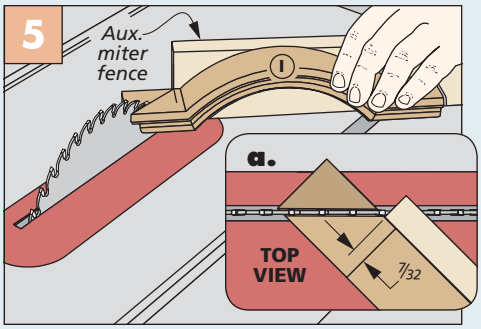

Miters. Add an auxiliary fence to your table saw's miter gauge and pivot it to 45° before trimming the molding's miters.

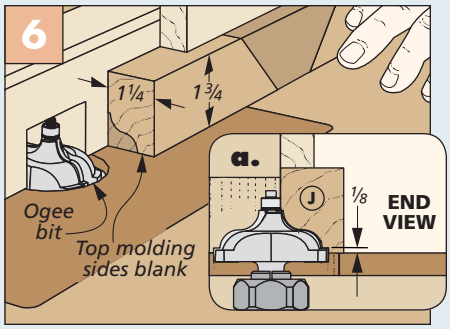

Side Moldings. Since they're straight pieces, you can rout the ogee using the router table fence as a guide.

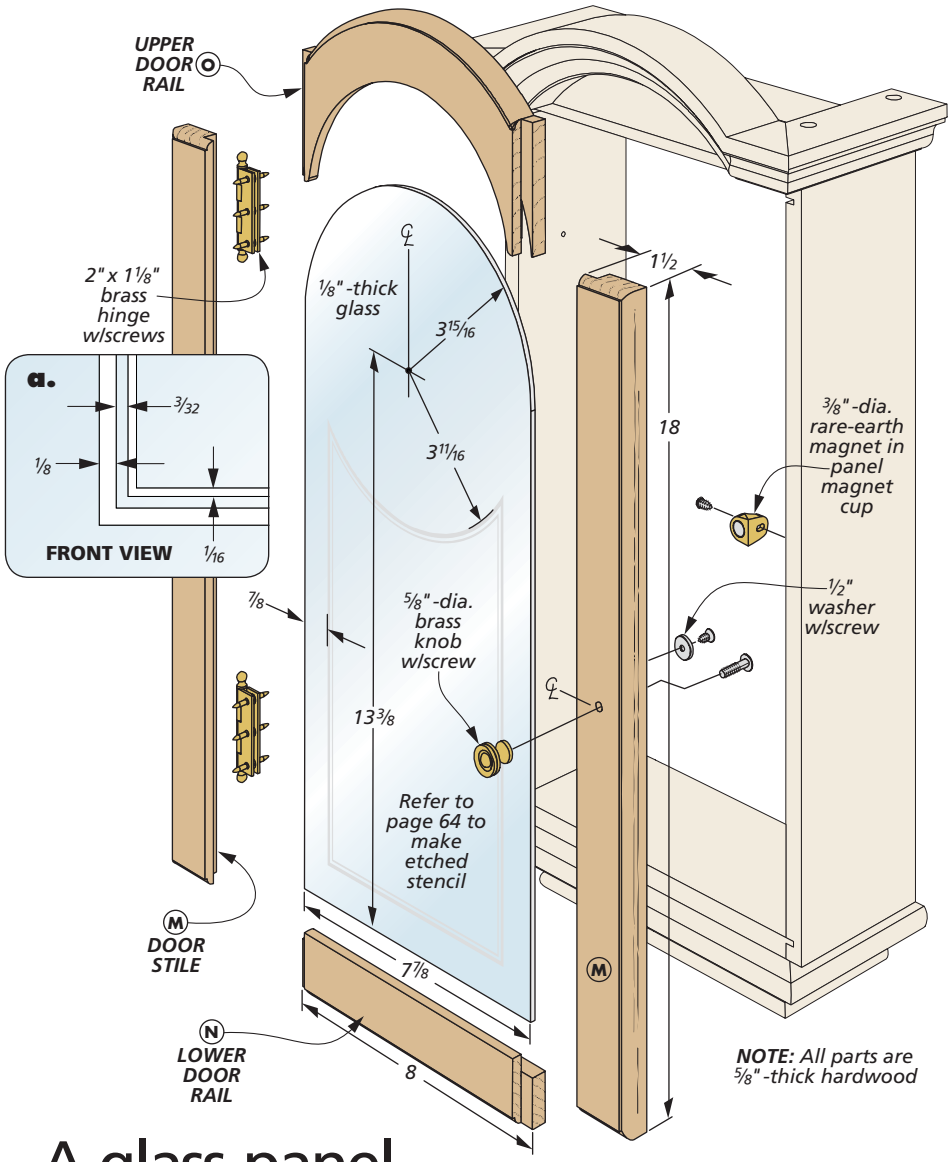

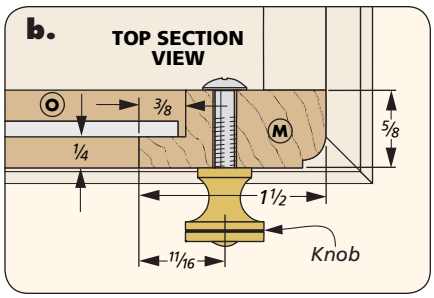

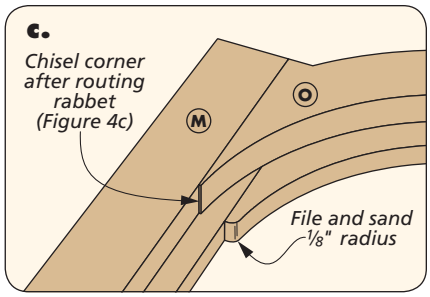

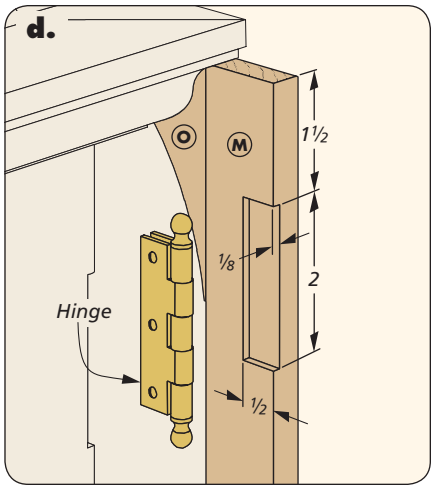

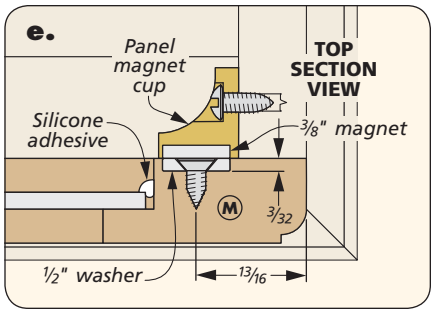

A glass-panel DOOR

Now that the clock case is complete and fully trimmed out with molding, you can turn your attention to the door that goes on the front. As shown above, this door has a lot of unique details. An arched upper rail matches the radius of the top molding above it, while a glass panel with an etched stencil fits a rabbeted opening in the door frame.

RABBETED JOINERY. The joinery that brings the door rails and stiles together is also unique: As shown in details 'b' and 'c' above, it's a lap joint between the rails and stiles. Cutting the first rabbet for this joint also serves double-duty by forming the rabbet that the glass will fit in later. You'll still need to add the rabbet to the curved upper rail. I'll provide more information on that in a minute.

PREP THE DOOR RAILS & STILES. The door rails and stiles are all made from 5/8"-thick hardwood, so you'll need to start by planing your stock for the parts to final thickness. Then you can cut the stiles and lower rail to final size, but the curved upper rail will start as a larger, squared-up blank.

CUTTING RABBETS. The next step is the lap joints on the stiles and rails. These are quick work at the table saw, as shown in Figures 1 and 2 on the following page. You'll want to make test cuts here to dial in the blade heights for a perfect fit between the parts.

UPPER RAIL. When it's completed, the arch on the upper rail should be a good match with the top molding piece that will rest right above it. It should also create an even gap between the rail and molding when the door is closed. The radii shown in the drawing on the next page should be close. But to make sure it's a good fit, I cut just outside the layout lines, as indicated in Figure 3, and checked it against the molding before fine-tuning the final shape of the part with sandpaper.

ASSEMBLY. Once you're happy with the shape, use files and sandpaper to add a slight roundover to the bottom corners of the upper rail, as shown in detail 'c' on the previous page. Then assemble the door with glue and clamps.

RABBET. You still need to complete the rabbet on the curved upper rail to hold the glass panel. This is accomplished with a rabbeting bit in a hand-held router, as in Figure 4. There are a few considerations here. For one, the curved part can tear out easily as you rout, so it's a good idea to do a light backrouting pass first. (Refer to page 12 for more on backrouting.) Also, I put a scrap panel in the door before routing to stop the bit's bearing and prevent routing into the door's stiles. When you're done, a little cleanup work with a chisel is needed (Figure 4c).

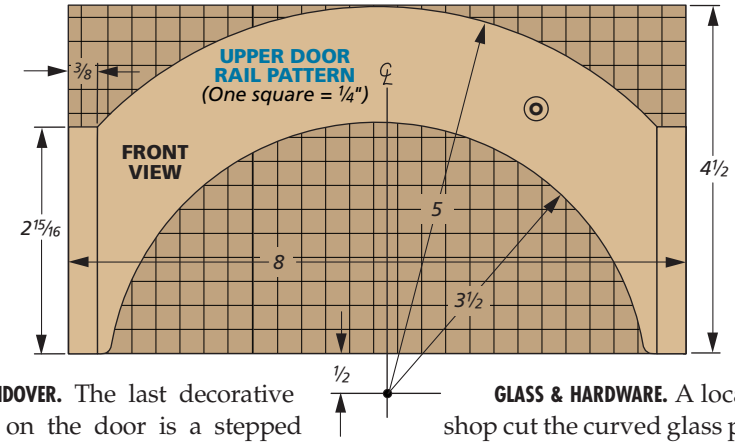

ROUNDOVER. The last decorative detail on the door is a stepped roundover around the outside front edges. This is easy work at the router table, as you can see in Figure 5. Then you'll need to cut the hinges for the mortises. A hand-held router with a straight bit and a chisel can take care of this. As you can see in detail 'd' on the previous page, they aren't very deep.

GLASS & HARDWARE. A local glass shop cut the curved glass panel to shape. I loaned them the finished door, so they could get a proper fit. Then I added the pattern to the glass (page 64) before securing the glass in the rabbet with a bead of silicone adhesive (detail 'e,' page 50). After that, it's just a matter of adding the hinges, knob, and magnetic catch.

How-To: BUILD THE DOOR

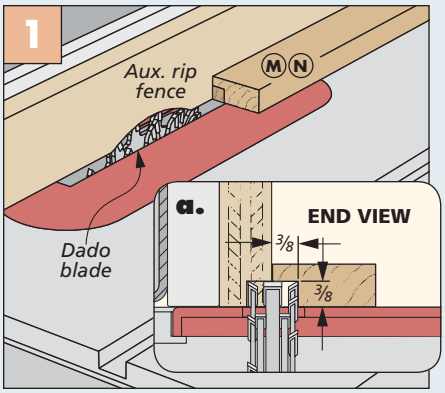

Lap Joint. Cut a rabbet on the inside edges of the stiles, as well as the lower rail, for the first part of the lap joint.

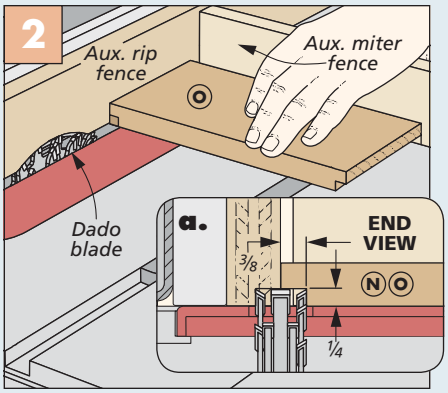

Rabbet Two. A mating rabbet then goes on the ends of both rails. Sneak up on a perfect fit with the first rabbet.

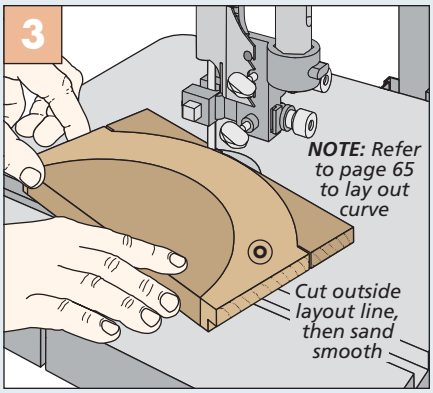

Curved Cuts. Cut the upper rail to final shape at the band saw. Check the fit against the top molding of the case.

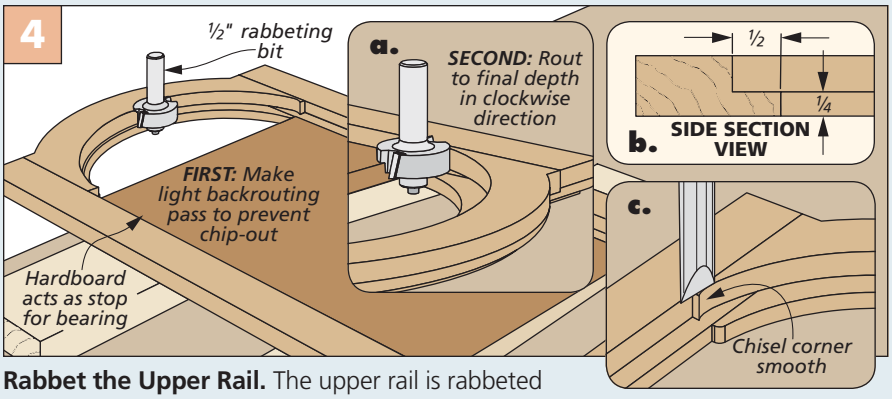

Rabbet the Upper Rail. The upper rail is rabbeted with a hand-held router and rabbeting bit. Make a light backrouting pass first to prevent chipout. Also note the hardboard backer that prevents routing into the stiles.

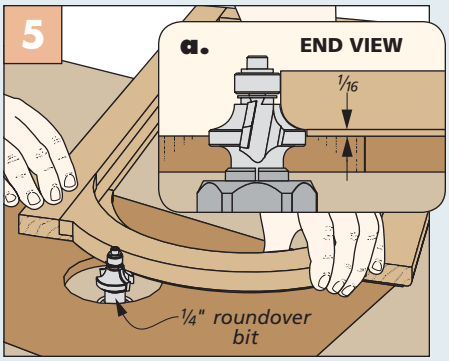

Roundover. The stepped roundover on the perimeter of the door is made by raising the cutter just above the table.

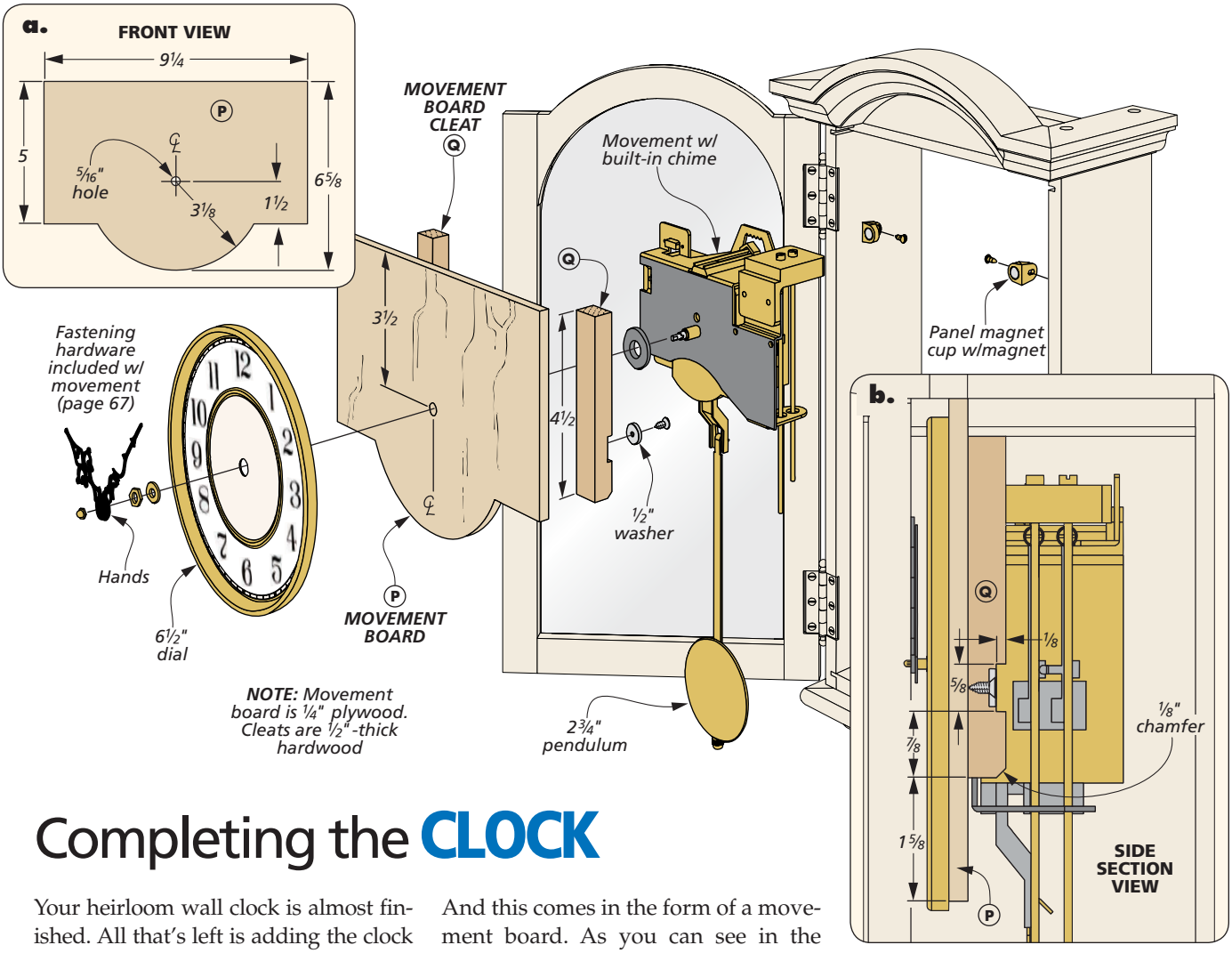

Completing the CLOCK

Your heirloom wall clock is almost finished. All that's left is adding the clock components and getting the clock ready to mount to the wall.

MOVEMENT BOARD. Inside the clock case, you'll need a surface for mounting the clock movement, dial, and hands. And this comes in the form of a movement board. As you can see in the drawings above, this is just a plywood panel that's cut along the bottom to match the shape of the dial. After that, you'll drill a hole in the board to allow the movement shaft to pass through it.

MOVEMENT BOARD CLEATS. The movement board is held in place by a couple of magnets installed in the clock case (drawings above). On the back of the movement board, I added a pair of cleats to meet up with these magnets. The cleats have notches cut in them to fit over the magnet cups, as well as washers installed in counterbores to stick to the magnets. The box at left has all the details you need to complete the cleats before gluing and clamping them in position on the back of the movement board, flush with the outside edges.

ASSEMBLING THE CLOCK COMPONENTS. Now it's time to put together all of the parts that make the clock work. The components that I used are listed in the supplies box on the following page and in Sources on page 67. For even more information, you'll find an article about choosing your own clock parts starting on page 10.

How-To: MAKE MOVEMENT BOARD CLEATS

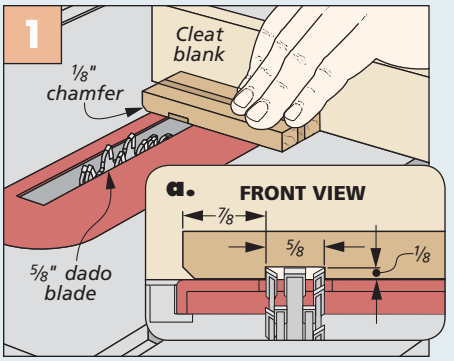

Notches. To create the notches, cut a dado across an extra-wide blank before ripping the cleats to final width.

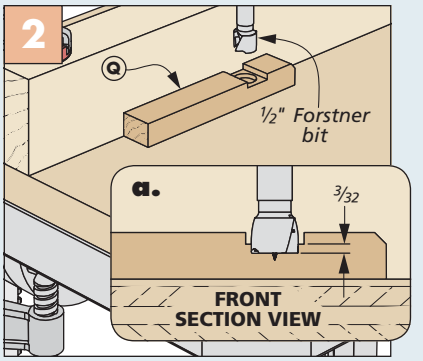

Counterbores. Use a Forstner bit to counterbore holes for the washers inside the dadoes on the cleats.

For this clock, I purchased a battery-powered quartz movement with a built-in chime that also accommodates a pendulum, which is sold separately. A shaft on the movement passes through the hole in the movement board, where you can slide on the dial and the hands. All the necessary hardware is included with the movement, and it all goes together like, well, clockwork.

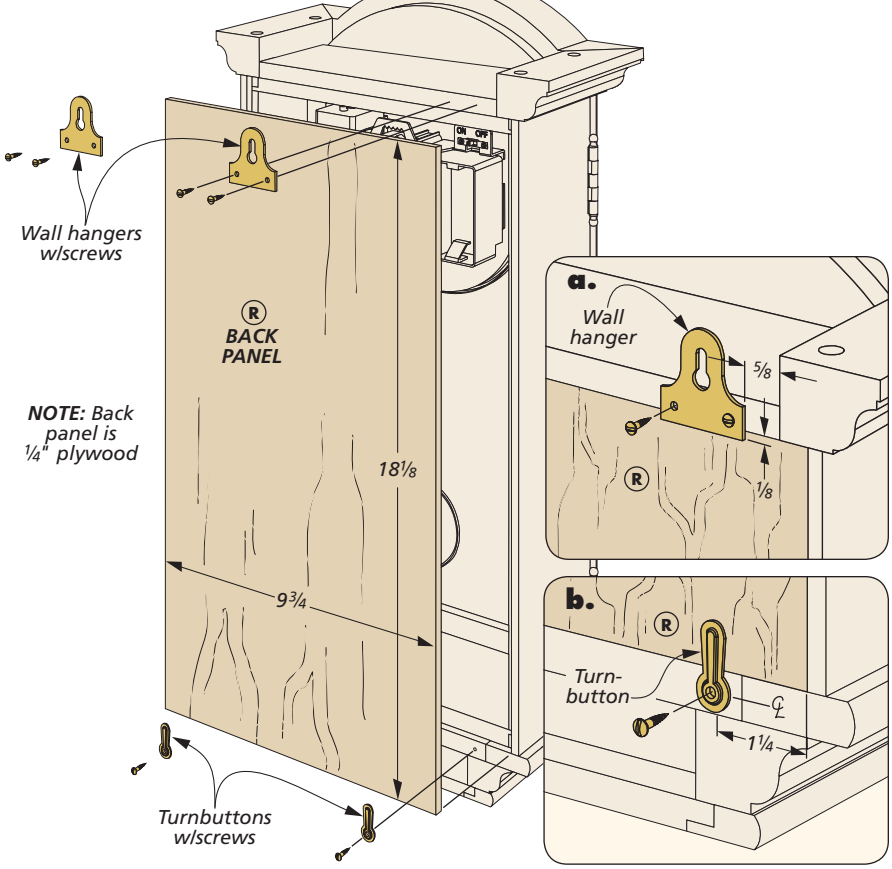

FINISH WITH THE BACK PANEL

Now you just need to enclose the back of the clock case and add the hardware necessary to mount the clock to the wall. The back panel is made from plywood. It's cut to fit into the rabbets in the case sides and over the case top and bottom. The drawings at right provide all the details.

At the bottom of the case, a pair of brass turnbuttons are installed to hold the back panel in position. And at the top, a pair of brass wall hangers are mounted so they slightly overlap the top end of the back panel. I used two hangers so the shifting weight of the clock won't cause it to move when you open up the door. If you ever need to remove the back, you simply flip the turnbuttons and slip the back down underneath the hangers.

A WORTHY HEIRLOOM. After applying a finish, all that's left is to find the right spot on the wall for displaying your new clock. And, of course, don't forget to set it. It's an attractive little clock that's sure to garner a few more questions from your family and friends than simply, "What time is it?" W

Materials, Supplies & Cutting Diagram

A	Case Sides (2)	1/2 x 4 - 18 1/8
B	Case Bottom (1)	1/2 x 3 3/4 - 9 3/4
C	Case Top (1)	1/2 x 3 - 9 3/4
D	Upper Base Molding	1/2 x 1 1/2 - 25 rgh.
E	Upper Base Mldg. Back (1)	1/2 x 1 - 8
F	Middle Base Molding	7/8 x 1 1/2 - 25 rgh.
G	Lower Base Molding	3/8 x 1 - 25 rgh.
H	Base Panel (1)	1/4 ply. - 2 3/8 x 7 1/4
I	Top Molding Front (1)	1 3/4 - 3 x 13 1/4
J	Top Molding Sides (2)	1 3/4 - 1 1/4 x 5 1/2
K	Top Molding Backer (1)	1/2 x 2 1/2 - 8 3/4
L	False Top (1)	1/2 x 3 1/4 - 8 3/4
M	Door Stiles (2)	5/8 x 1 1/2 - 18
N	Lower Door Rail (1)	5/8 x 1 1/2 - 8
O	Upper Door Rail (1)	5/8 x 4 1/2 - 8
P	Movement Board (1)	1/4 ply. - 6 5/8 x 9 1/4
Q	Movement Bd. Cleats (2)	1/2 x 3/4 - 4 1/2
R	Back Panel (1)	1/4 ply. - 9 3/4 x 18 1/8

- (4) #8 x 1 1/4" Fh Woodscrews
- (4) 3/8" x 3/8" Edge Grain Plugs
- (4) #8 x 3/4" Fh Woodscrews
- (1) 1/8"-thick Glass Panel
- (2) 2" x 1 1/8" Brass Hinges w/Screws
- (1) 5/8"-dia. Brass Knob w/Screw
- (3) 3/8"-dia. Rare-Earth Magnets
- (3) Panel Magnet Cups w/Screws
- (3) 1/2"-dia. Magnet Washers w/Screws
- (1) Quartz Movement w/Hardware
- (1) 2 3/4" Quartz Pendulum Assembly
- (1 pr.) Clock Hands
- (1) 6 1/2" Clock Dial
- (2) Turnbuttons w/Screws
- (2) Wall Hangers w/Screws

ALSO NEEDED: *One 24" x 24" sheet of 1/4" walnut plywood*

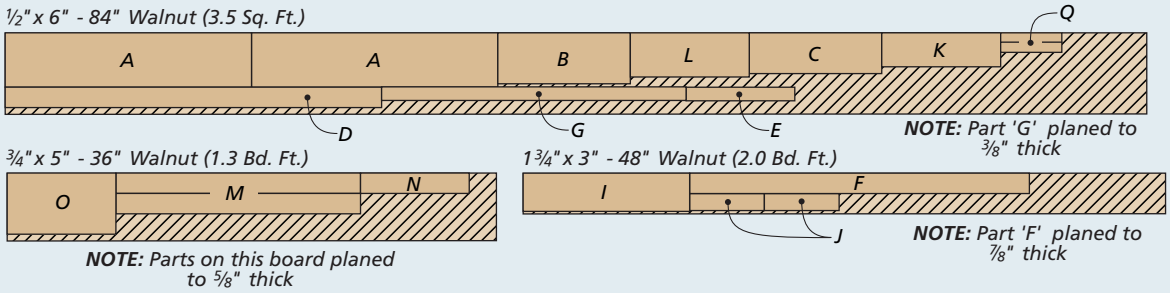

creating shallow **Bevels**

Whether it's on a tabletop or a decorative piece of trim, a chamfer or bevel is a simple, elegant way to dress up a project while at the same time softening sharp edges. And you've probably noticed that in most cases, those chamfers and bevels are cut at a 45° angle.

There's usually a good reason for this: These are the easiest chamfers and bevels to cut. Creating them requires either tilting your table saw blade to 45° before passing the workpiece through with its face down on the saw table, or using the quite-common 45° chamfer router bit to make the cut.

A DIFFERENT ANGLE. For many woodworking projects, however, a lower-angle chamfer or bevel yields a better overall look for the project. In many cases, the wider bevel has a pleasing appearance, and the low-angle means you don't have to remove as much stock to create it. The two projects below are good examples where a 45° bevel wouldn't have looked quite right.

The only problem is, there's no readily available way to cut these easily. After all, the table saw blade won't tilt beyond 45°, and you can't change the angle of your chamfer router bit.

With a little ingenuity, though, it's possible to break free from 45° chamfers and add a custom touch to your projects. Here are a few ways to go about it.

LOW-ANGLE BEVELS AT THE TABLE SAW. Creating a low-angle bevel or chamfer at the table saw is a challenge. The key reason is that the blade can't tilt far enough to cut them with the workpiece face down. The solution to this problem is to turn the piece on edge or end before passing it through the blade.

Before you just set your piece on edge against the rip fence, though, a few setup measures are warranted for this type of cut. For one, you'll want to use a tall auxiliary fence to support the workpiece and prevent it from tilting into or away from the blade. Since I find myself doing these types of "edge" cuts a lot, I built a dedicated tall auxiliary rip

◄ This box lid is a perfect example of where a low-angle bevel can soften the edge and add a pleasing design feature.

The base of a box or clock case ► is another area where a shallow bevel lends a unique look to the project.

fence for this purpose (main photo on the previous page). It has a U-shaped support that straddles the existing rip fence, and a couple of knobs in threaded inserts secure it in position.

Even with the tall auxiliary fence, there's still a chance that the piece could tip. So I also position a tall featherboard to support the workpiece as I cut. With that done, set the blade angle and carefully pass the workpiece through it.

SHALLOW CHAMFERS AT THE ROUTER TABLE. While 45° chamfer bits are the most commonly available, they're not the only option. As the drawings and photos on the right indicate, chamfer bits at a variety of different angles can also be purchased.

The bits shown at the top right have angles lower than 45°. Specifically, 30°, 22.5°, and 15° bits are shown. These bits are often used for cutting the ends of multi-sided boxes, but you can also use them to trim a shallow angle on the edge or end of a workpiece.

One issue with these low-angle bits is that you'll have to position the workpiece on edge or end, just as you did for the table saw cut discussed previously (refer to Figure 1). Because of this, it's a good idea to use a tall router table fence and a featherboard. Also, the size of bevel you can cut is limited by the length of the router bit's cutter (detail 'a').

As Figure 2 indicates, there's also a 60° chamfer bit. This bit is somewhat pricier than the other router bits shown, but it offers the safety and stability of cutting with the workpiece face down.

The 60° chamfer bit has a relatively large diameter, so it's best to run it at a lower speed and take multiple passes of gradually increasing depth. The result is a smooth, attractive low-angle bevel that doesn't require a lot of cleanup after you're finished cutting it.

BEVELS BY HAND. If you enjoy working with hand tools, a smoothing plane offers yet another bevel-cutting method (box below). Whichever technique you choose, it's sure to add a pleasing detail to your finished project. W

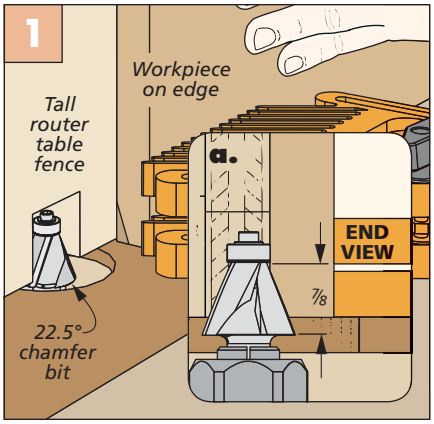

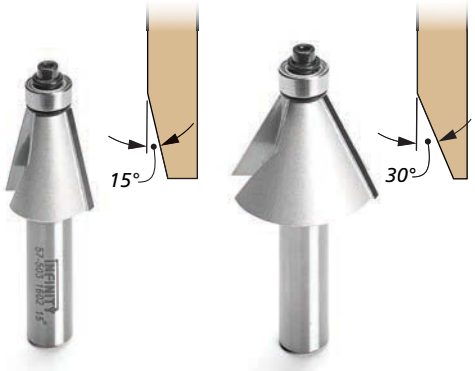

▲ Chamfer bits are available with angles of 22.5° (drawing), 15° (left photo), or 30° (right photo) for cutting bevels.

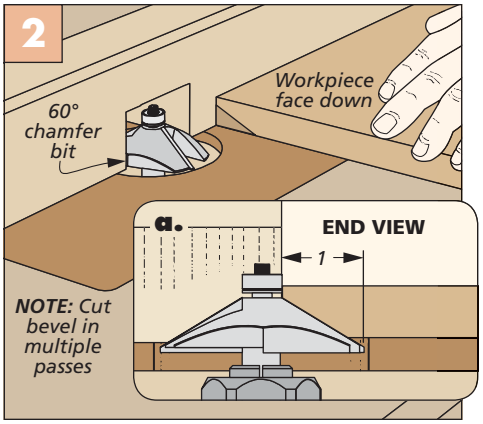

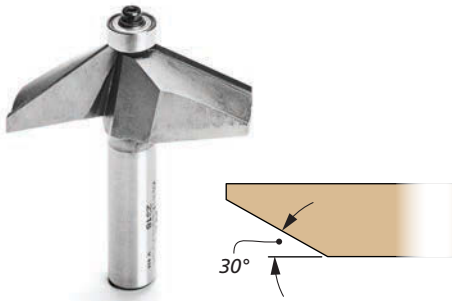

▲ This 60° chamfer bit lets you create the same 30° bevel but with the workpiece face down on the router table.

How-To: HAND PLANE BEVELS

If you're looking to create a wide bevel at almost any angle, a smoothing plane is a good choice. First, lay out the end points on the edges and face of the workpiece using a square (inset photos at left). Then skew the plane slightly, with the toe pointed toward the end of the piece, and make a pass. Do the ends first, then the edges, to reduce tearout.

As you get closer to the layout lines, move the plane more in line so it's parallel with the edges of the piece and continue planing (main photo). Once you've reached the marks, a light sanding should be all that's needed.

tips for using a Drill Press Mortiser

I consider my drill press an essential tool in my shop, ranking right up there with my router and table saw. What makes it so critical is versatility. With the right accessories a drill press can tackle all kinds of tasks from smoothing to joinery, in addition to its usual drilling roles.

One accessory that I use to get more from my drill press is a mortising jig. Now I've heard all the criticism: It's time-consuming and finicky to set up, you can't get enough leverage, and the results are questionable.

But personally, I've used a mortising jig for a number of years and find it to be a valuable addition for a small shop. In that time, I've discovered a few secrets for getting accurate, consistent results.

WHAT'S IMPORTANT. The mortising jig consists of two basic components. There's a yoke that attaches to the drill press quill and holds a hollow chisel and bit. The other component is a fence with hold-downs. For sources, refer to page 67.

In my experience, the fence is the weak link in the chain. It attaches to the stock table on the drill press. It's short and can be tricky to adjust. Like many woodworkers, I have a large shop-built table and fence, so the thought of having to remove that capable setup every time I want to create mortises seems unnecessary.

Instead, I only use the yoke and bits. This way, I can take advantage of my table and fence and streamline the changeover for mortising (left photo). You may consider adding a tall auxiliary fence in order to clamp a hold-down above the workpiece, as you can see in the photo above.

THE YOKE & BIT. With the fence out of the way, getting the yoke set up is only a little more involved than installing a typical drill bit. Start by slipping the yoke over the chuck and onto the stop collar on the quill, as you can see in the upper left photo on the next page. (The jig comes with a number of bushings to accommodate almost any size collar.)

Insert the hollow chisel and auger bit into the yoke and chuck next. Tighten the chisel in the yoke for now. You'll fine-tune the chisel after setting the fence.

SETTING THE BIT. Creating mortises generates a lot of friction. Stand-alone mortising machines overcome that with leverage. At the drill press, you need to play to its strengths.

The idea is to let the auger bit do most of the work breaking up and clearing the waste. The chisel follows behind to square up the hole. This arrangement eases the burden on the drill press. To accomplish this, set the bit so the horizontal lifters on the bit are slightly below the tips of the chisel, as shown in the middle photo on the next page.

SET THE FENCE. The next area of attention is setting the fence. In the end, the fence needs to be the correct distance from the bit, and the chisel has to be square to the fence face to create a flat mortise. You can make things easier if you break the process into two steps.

First, instead of laying out the entire mortise, I find it easier to mark the centerline of the mortise on a workpiece.

▼ Installing a yoke, hollow chisel, and an auger bit are all you need to convert your drill press into a handy mortising station.

A cast iron yoke holds a hollow mortising chisel. The yoke is secured to the collar just above the chuck on the quill.

A small scrap of wood protects your fingers while setting the auger bit in relation to the chisel.

After setting the fence using the workpiece as a gauge (inset), use a square to fine-tune the chisel alignment.

That line serves as a gauge to locate the fence using the sharp point of the bit, as the upper right inset photo shows.

After positioning the fence, aligning the chisel is easy to do. Loosen the chisel slightly in the yoke and align one face with a square that's held against the fence (upper right photo).

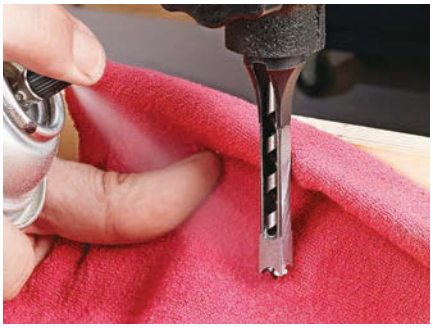

To reduce friction during use, spray the hollow chisel and auger with a dry lubricant for bits and blades.

MORTISING JIG IN USE

A smart approach to setup gets you off on the right foot. In addition, there are a few tricks that can help you get the best results with a mortising jig.

KEEP THEM SHARP. One way is to make sure the chisels and bits are in top shape. The steps for sharpening are shown in the box below. You can also purchase higher-quality aftermarket chisels and bits to improve the performance of your jig or fill out your set if you bought the jig used.

REDUCING FRICTION. Another thing you can do to give your jig a leg up is to spray the chisel and bit with a "bit and blade" lubricant before you start (left photo). Then reapply the lube periodically while you work. And don't worry; the lubricant won't affect gluing or finishing.

SPEED CONTROL. One strong advantage a drill press mortising jig offers is that you can adjust the speed to suit the material. (Dedicated mortising machines operate at fixed speeds.) A good starting point is around 1000 rpm. If you notice wisps of smoke in use or the chips look a little "toasted," reduce the speed. This may happen with hard, dense materials like maple and white oak. Softer materials allow you to increase the speed and get the task done more quickly.

CLEAR THE CHIPS. Mortising creates a lot of waste chips. Working too fast can lead to the chisel getting jammed in the workpiece. You can prevent jamming by retracting the bit occasionally as you go, much like using a Forstner bit.

The bottom line to success is familiarity. It doesn't take long to get the hang of setting up a mortising jig. With a little experience, you'll find that a drill press is a solid tool for creating accurate mortises in a small shop. W

How-To: SHARPEN THE CHISELS & BITS

Hone the inside faces of the auger bit's cutting lips with a fine-grit diamond paddle. A few strokes is all it takes to get a clean, sharp edge.

Use a waterstone to remove milling marks on the four faces of the hollow chisel.

A diamond sharpening cone makes short work of sharpening the bevel on the inside of the hollow chisel.

simple steps for

Sharpening Drill Bits

There's no question that sharp tools are easier to use, cut cleanly, and are more accurate. However, it doesn't take much for some tools to become neglected. That's especially true for certain drilling accessories and bits.

Rather than treating drill bits and accessories as disposable items, you can keep them in top shape with just a minimum of effort. All you need for the job is a little know-how and the handful of accessories shown at the lower left.

FORSTNER BITS

Forstner bits are one of the simplest types of bits to keep in top shape. There are two areas that need attention: the lifters and the rim. First, use a 1200-grit diamond hone (refer to Sources on page 67) to take a few strokes on each of the flat lifters on the bit, as in the middle photo below. Make the same number of strokes on each ramp to keep them even.

HONE THE RIM. The second step is to hone the outer edges of the bit. Forstner bits come in two styles. Some bits have a smooth rim. For these, you can wrap fine sandpaper (800-grit) around a dowel and make a few strokes along the inner bevel of the rim.

▼ A waterstone, sandpaper, auger file, and a super-fine diamond hone are all you need to sharpen bits.

▲ With a diamond hone, take the same number of strokes on the lifters and ramps on each side of the Forstner bit.

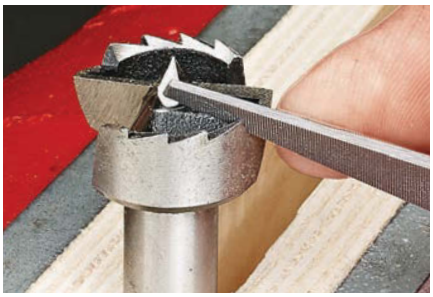

▲ Use a fine auger file to touch up the front edge of each tooth on the rim. Maintain the same bevel angle on the bit.

Multi-spur Forstner bits have a series of teeth around the edge. On larger bits, the diamond hone works well. But for 1"-dia and less, I like to use a small file such as the auger file shown in the lower right photo on the previous page.

COUNTERSINKS

Over time, the edges on a countersink tend to dull. It can leave chatter marks and torn grain. Tuning it up depends on the type of bit you have.

ZERO-FLUTE. A zero-flute bit has a cross hole that forms the countersink. The task here is to hone the intersection of the hole and the outer cone of the bit. For the hole, I roll sandpaper into a tight tube and pull it out through the hole at the end of the bit (upper left photo). Avoid using back-and-forth strokes to keep the edge from rounding. The upper right photo shows how to polish the outer cone.

MULTI-FLUTE. Another type of countersink bit features one or more straight flutes ground into the cone. To touch up these edges, hold the face of the flute flat on a diamond paddle and take a few strokes. Here again, use the same number of strokes on each flute.

▲ Roll up a piece of sandpaper to hone the inside of a countersink bit. Pull the sandpaper toward the end of the bit.

▲ With the drill press running at low speed, polish the tip of the bit using sandpaper wrapped around a hardwood block.

▲ On a multi-flute countersink bit, sharpen each flute by taking a few strokes along the edge of a diamond hone.

▲ After touching up the flat faces of the prongs, hold the plug cutter at an angle to sharpen the beveled ends as well.

PLUG CUTTER

Plug cutters work by using a scraping action that generates a lot of heat. That heat is what wears down the cutting edges. To bring them back to life, you'll need to work on two cutting surfaces.

The first is honing the sides of the prongs. This is accomplished by holding each prong flat on a diamond paddle. The stroke is very similar to honing the multi-flute countersink bits.

The other surface that needs attention is the tips of the prongs. Since they're smaller, you need to be more deliberate as you work to sharpen the edge, as shown in the lower right photo above.

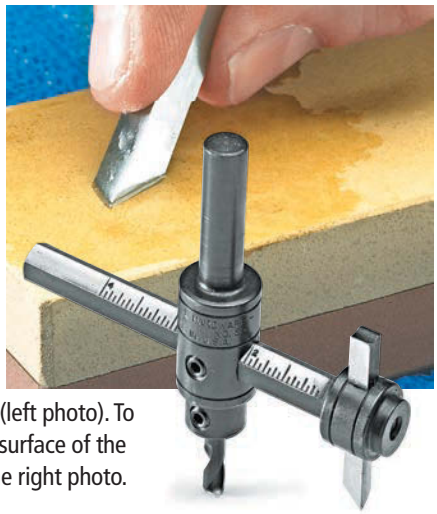

▲ Hone the back of the cutter on a waterstone (left photo). To sharpen the bevel, hold the bevel flat on the surface of the stone and draw it back several times, as in the right photo.

CIRCLE CUTTER

Like a plug cutter, a circle cutter employs a scoring or scraping action. Forcing the cutter to work by applying more pressure with the drill press isn't the answer.

Think of the cutter as if it were a small chisel. The cutting edge is formed by the back faces and bevel coming together in a nice sharp edge. So the first thing to do is flatten the back of the cutter on a combination waterstone (far left photo).

Once the back is flat, all that's left to do is hone the bevel. The key is keeping the bevel flat on the stone. This is easier to do by feel than by sight. Then draw the cutter toward you, as in the near left photo. Repeat the process until you get an evenly polished surface. W

shop-made

Straightedge Guides

▲ This simple, two-part jig can be customized for routing dadoes (main photo) or cutting sheet goods (inset).

If you visit the shop of any seasoned woodworker, chances are you'll see a collection of shop-built jigs and fixtures to go along with the tools. There's a very good reason for this: As your skills increase and you build more projects, you'll gradually add some handy helpers to make common operations easier to accomplish, with more accurate results.

A GREAT STARTER JIG. Of course, jigs come in all shapes and sizes and can be made for just about every tool. But as far as simple and useful jigs go, one I turn to time and again is the shop-made straightedge guide shown above. With a piece of hardboard, a strip of plywood, and some glue, you can make a cutting guide that's invaluable for cutting dadoes, grooves, and rabbets and even breaking down larger sheet goods with a circular saw.

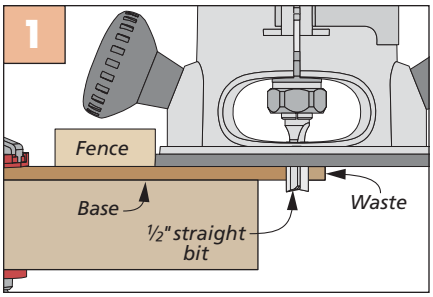

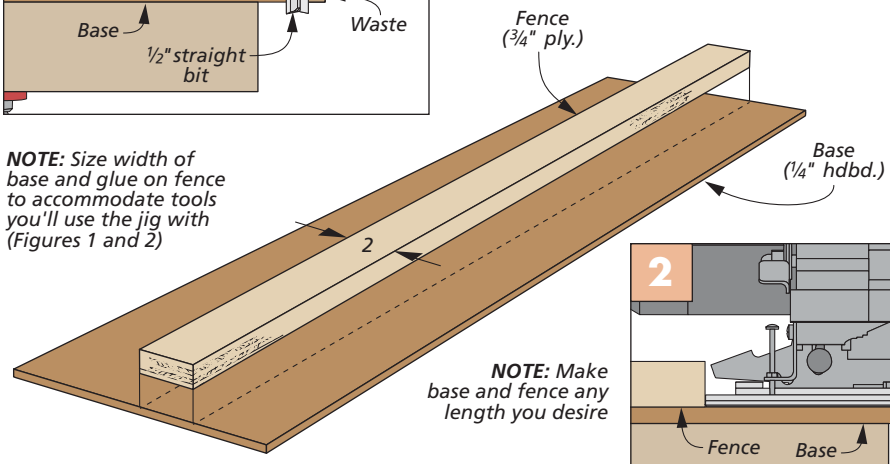

NOTE: Size width of base and glue on fence to accommodate tools you'll use the jig with (Figures 1 and 2)

NOTE: Make base and fence any length you desire

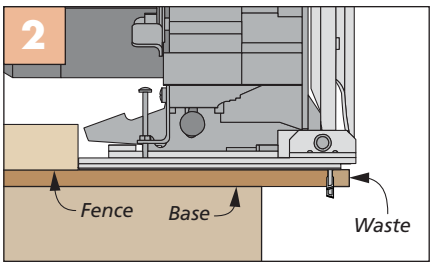

UNDERSTANDING THE EDGE GUIDE. As shown in the drawing on the left, there isn't a whole lot to this straightedge guide. It's just a wide base made from hardboard with a narrower plywood fence glued to the top. As for the overall length of the guide, you can really make it any length that you want. I'll talk about some considerations in just a minute.

One thing that's key when creating the guide is making sure that the hardboard extends well past both sides of the plywood fence as you glue

and clamp it on. This is for the next step in the process, which is the secret to the guide's versatility, as well as its accuracy.

You see, after building the guide as shown in the drawing, you actually trim the edge of the hardboard with the tool you're planning to use with the guide. The end result is a base that will line up precisely with your desired cutline when using that tool.

You have several options for this step. For example, you can equip your router with a ½" straight bit for cutting ½" dadoes and grooves, and then trim the edge of the hardboard with that bit (refer to Figure 1 on the previous page). Or cut along it with a circular saw to create a precision cutoff guide for breaking down plywood panels, as shown Figure 2. In fact, the guide shown in the photos on the previous page is set up for both tools. You can use the router along one edge and the circular saw along the other.

ONE JIG, MANY USES. Really, these ideas are just the beginning of this jig's versatility. Starting with the basic concept shown in the drawings on the previous page, you can adapt the jig for a variety of different tasks.

CHANGE THE LENGTH. For example, it's possible to make it as long or as short as you'd like for various sizes of project parts. If your main use for the jig will be for dadoes across narrow case sides, for example, then it probably doesn't need to be any longer than 28". But if you plan to use the guide for routing grooves or breaking down full sheets of plywood, then simply make the guide 54" long or even longer yet.

ADD A CLEAT. I use a square for positioning the guide on my workpiece (photo, right). But if you'd like to build that feature into the guide, another potential modification is to add a cleat to the underside of the base that's perpendicular with the fence.

I like to make several guides, such as the 28" and 54" ones shown, for various cutting and routing operations.

ROUTER JOINERY. I already discussed how easy it is to make a guide for cutting both dadoes with a router and sheet goods with a circular saw. Another option is to make a double-sided guide that's set up for using two different diameters of straight router bits. If you find that you cut a lot of ½" and ¾" dadoes and grooves, simply cut down one side of the hardboard base with a ½" bit. Next, rout down the opposite side with a ¾" bit. Like that, you have one guide that can accurately cut two different sizes of dadoes or grooves. Just make sure to label the hardboard bases of the jigs clearly, so that you'll know what each side of the jig is for when you need to use it again in the future.

CUSTOM DADOES & GROOVES. Another interesting twist on this idea is featured in the box below. In this case, you make two guides and trim the edges with a bit that's smaller than the intended dado or groove. Then using the sequence shown in the photos below, cut a custom-size dado or groove that's precisely matched to the thickness of the mating workpiece.

MUST-HAVE ACCESSORY. There's no question that my shop is outfitted with all kinds of jigs, some basic and some quite elaborate. And while these shop-made straightedge guides are some of the simplest jigs I have, I also find that I use them more than many of the others. I'm guessing that you probably will, too. W

How-To: ROUT A CUSTOM-SIZE DADO

After laying out one edge of the dado using a pencil, clamp the first straightedge guide tightly against the layout line.

Next, use a scrap of the material that will go into the dado to position the second guide. Then clamp that guide in place.

Complete the custom-size dado by routing against the fence of one guide (shown) and back down the other guide.

top-notch results with a Tenoning Jig

There are quite a few jigs available for making accurate cuts on the table saw. But one that I turn to again and again is the granddaddy of them all — the tenoning jig. It's been around nearly as long as commercial table saws have.

As the name implies, it's designed for creating a tenon on the end of a workpiece. Specifically, it's used for cutting the wide cheeks of the tenon. To do this, the jig holds a workpiece vertically while you slide the jig past a saw blade. The result is a smooth surface that creates an ideal glue joint. As simple as it sounds, getting reliable results requires paying attention to a few setup details. From there, it's a matter of using good technique and a little practice.

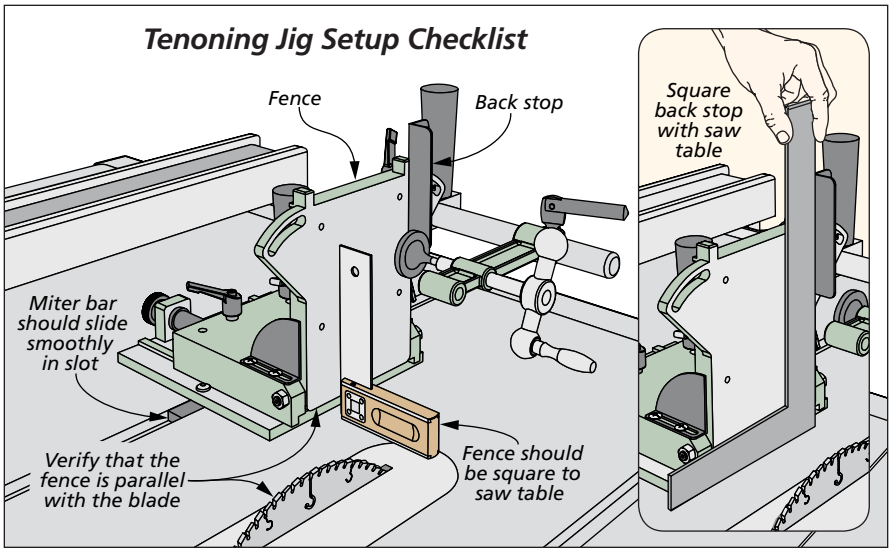

SETUP TIPS

The starting point for using a tenoning jig is performing a "preflight checklist." This is especially true if you haven't pulled your jig off the shelf in awhile.

There are four items to check. Two are fairly obvious and two are easy to overlook. Use the drawing at left as a guide. Let's begin with the obvious items.

CHECK FOR SQUARE. Use a square to make sure the fence face is set perpendicular to the saw table. Next, check the angle of the back stop on the jig. For the vast majority of the tenons you cut, this needs to be square to the saw table as well (inset).

PARALLEL FENCE. You may be tempted to jump right into cutting a tenon. But the

next two items are just as important for making sure the tenons you cut are consistent. Loosen the adjustment knobs and slide the fence up to the blade. The fence has to be parallel in order to cut accurately sized tenons. If it isn't, loosen the bolts that secure the miter bar to fine-tune the fence setting.

MITER BAR. The last item is the fit of the miter bar in the slot in the saw table. Ideally, it should slide without side-to-side play. For a loose bar, apply aluminum foil tape to the edge. Add layers until you get a smooth-sliding fit.

Once you've completed any adjustments, it pays to verify your efforts by cutting a test tenon. The specific size doesn't matter. Use a square and a dial caliper to check the results. The upper right drawing provides some troubleshooting advice to fix any problems.

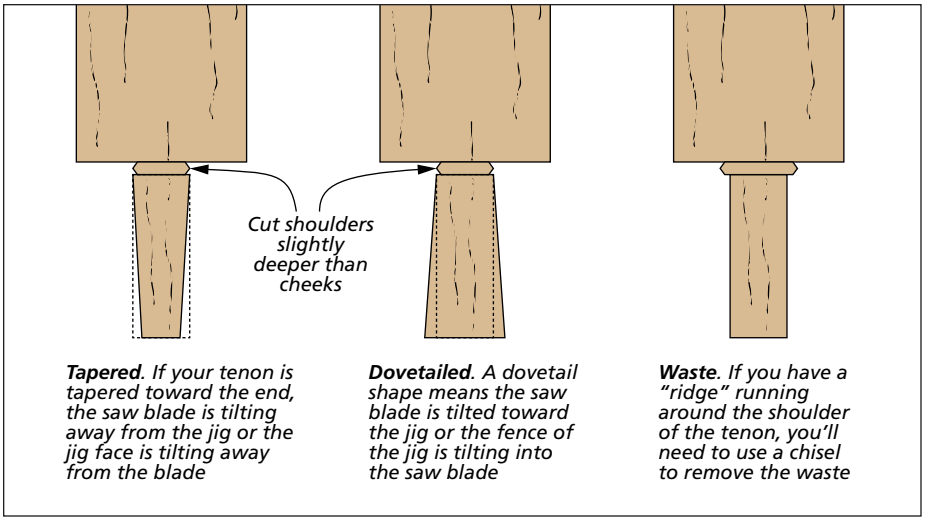

***Tapered**. If your tenon is tapered toward the end, the saw blade is tilting away from the jig or the jig face is tilting away from the blade*

***Dovetailed**. A dovetail shape means the saw blade is tilted toward the jig or the fence of the jig is tilting into the saw blade*

***Waste**. If you have a "ridge" running around the shoulder of the tenon, you'll need to use a chisel to remove the waste*

▲ Insert the spacer above the shoulder kerf so that the waste piece won't get trapped between the blade and jig fence.

IN USE

Setting up the tenoning jig correctly gets you a long way down the road for cutting top-notch tenons. Practicing good techniques while using the jig helps you reach your ultimate goal.

THE RIGHT ORDER. One of the main considerations is the process you use. As I mentioned earlier, the jig is used for the cheek cuts. The shoulder cuts are made with the workpiece lying flat on the saw table and are guided with a miter gauge.

I prefer to cut the shoulders first. This establishes the visible part of the joint and gives me a guide for setting the blade height when cutting the cheeks.

The blade should be set to overcut the shoulders by a hair. You can see this in the left examples in the drawing above. The reason for this is simple. The blade creates a crisp, square corner between the cheek and shoulder. So I can set the blade just below the shoulder line when I make the cheek cuts using the jig.

SAFE CUTS. Another consideration is where the blade is in relation to the workpiece and jig. When positioning the jig to make the cheek cuts, align the workpiece so the waste piece falls safely to the outside of the blade.

CENTERED TENONS. Cutting centered tenons is a fairly straightforward task. After making one cheek cut, flip the workpiece around to cut the opposite cheek using the same jig setting.

OFFSET TENONS. If you need to cut off-center tenons, that could mean re-adjusting the jig to cut the second cheek. I prefer to use a spacer to simplify the process, as in the left photo. With this method, you cut both cheeks with a single setup. The thickness of the spacer is the size of the tenon plus the width of the saw blade. After making the first cut, slip the spacer between the workpiece and fence to make the second cut.

OTHER USES. A tenoning jig isn't a one-trick pony. There are a number of tasks besides cutting tenons where you need to make a cut holding a workpiece vertically. The box at left shows two common examples that I use.

In my mind, one of the benefits of a table saw tenoning jig is the shallow learning curve. In just a few minutes, and with a few key pointers, you'll be well on your way to getting smooth, accurate tenons and other joints. W

How-To: MORE THAN TENONS

▲ A single shoulder and cheek cut are all that's necessary to cut a rabbet on the end of a workpiece.

▲ Angle the back stop to use a tenon jig to support mitered frame pieces to cut slots for splines.

tips from our shop

Shop Notes

Etched Glass Door

Etching is a simple way to add interest to glass or mirrors in your projects. On the wall clock on page 44, for example, I felt like the glass panel in the door needed a little something to enhance the overall look. By etching the pin-striped pattern on the front, I was able to complete the clock in style.

GET STARTED. It doesn't require much in the way of supplies to etch glass. The etching cream is readily available at craft stores and other retailers. You'll also need some vinyl shelf liner material, an artist's paintbrush, a sharp *X-Acto* knife, and a few layout tools.

ETCHING STEP BY STEP. You'll find the dimensions for the pattern on the glass in the drawings on page 50. After applying the vinyl shelf liner smoothly and evenly to the entire inside face of the glass, I laid out the pattern with a ruler and a sharp pencil. I used a compass for the rounded portions (Photo 1). Then I switched from a pencil to an *X-Acto* knife to cut out the portion of the pattern to be etched and carefully removed those pieces of the liner (inset photo).

APPLYING THE CREAM. Don't be stingy when it's time to apply the etching cream (Photo 2). You need to lay it on thick in order for the chemical to react properly with the glass and leave the desired etched appearance behind. After letting the cream sit for 5 minutes, you'll want to rinse it off the glass with running water. Work from the top to the bottom, using a soft-bristle brush to assist in removing the residue.

PEEL & REVEAL. All that's left is drying the glass. Then you can peel off the shelf liner to see the etched pattern that's left behind (Photo 3). The glass is now ready to add to the door.

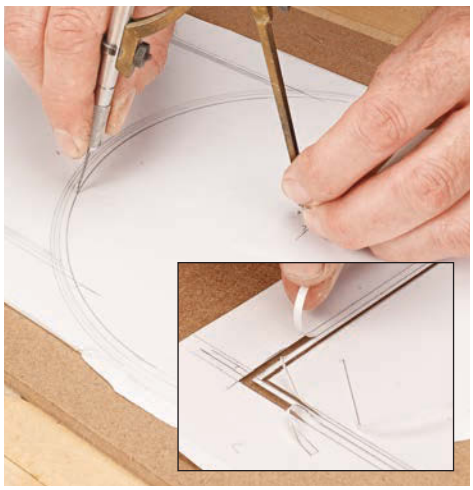

An X-Acto knife is ideal for cutting out the pattern. Put it in a compass to cut the arc, then carefully peel up the waste (inset).

Wearing latex gloves, apply a thick layer of etching cream over the exposed areas, until you can't see the glass beneath.

After the glass is thoroughly rinsed and dried, carefully pull up the vinyl liner to reveal the etched pattern.

Shop-Made Trammels

The wall clock has a lot of arcs to lay out and cut, so I made a pair of simple trammels to help in the effort. One trammel is used to lay out the arcs on the front molding and backer, while the second is for the door's upper rail (detail 'a').

The trammels are hardboard scraps with a series of holes, one to serve as the pivot point, and the others to scribe the arcs. After making the trammels, you'll position them as shown in the main drawing to lay out the arcs on the parts.

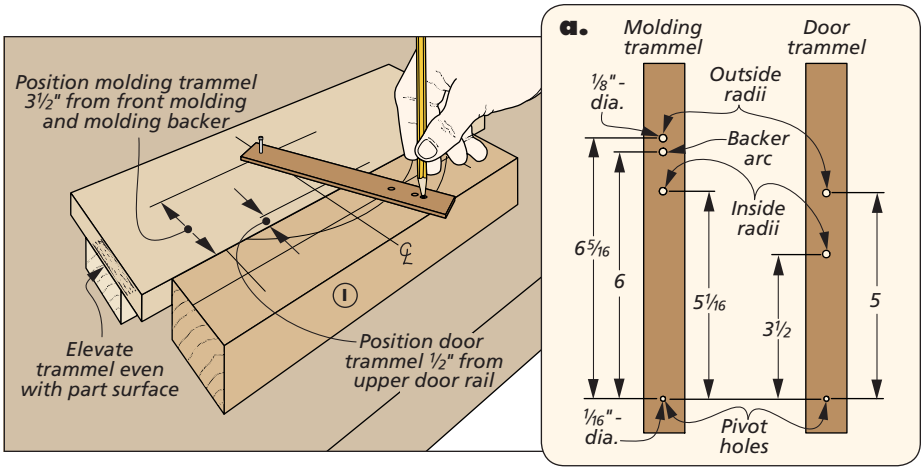

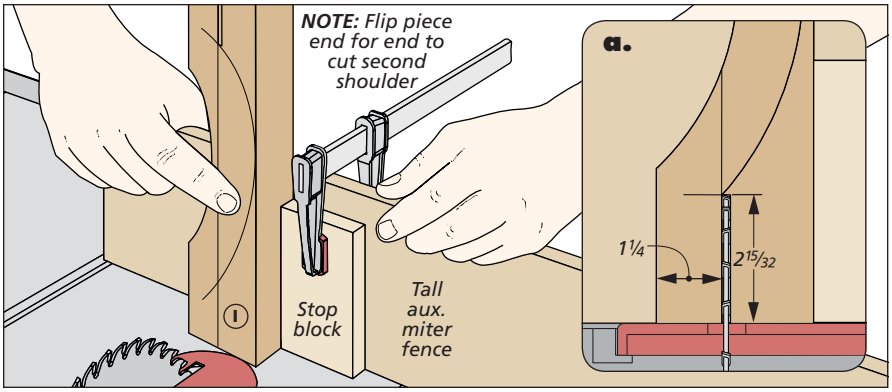

Straight Shoulders

The arc on the wall clock's front molding is cut at the band saw, but it has a pair of long, straight shoulders at the ends leading up to the arc. This is a very visible part of the clock and I wanted the cuts to be perfect. So after cutting the inside radius, I stood the part up on end to cut the shoulders at the table saw. The drawings at left show you how to do it safely and accurately. Then complete the arc as shown on page 49.

Hinge Installation Jigs

Accuracy and speed were on my mind as I came up with the two hinge installation jigs shown here. One is used to mark the cabinet sides for the hinge location. The other jig registers the door so you can drive the screws to install the hinges. The hinges are adjustable for fine-tuning the fit later on.

LAYOUT JIG. The layout jig in shown Figure 1 uses plywood blocks to indicate the hinge locations. The far right drawing shows the other parts of the jig.

The jig is positioned along the front of a side. Mark the ends of the hinge blocks to show the top and bottom of the hinges (Figure 1). Then it's just a matter of aligning the hinges and driving the screws.

DOOR JIG. The second jig holds the door in the open position to accurately place the hinges. A stop on the end registers the door to the bottom of the assembled cabinet (near right drawing). A spacer creates the necessary gap between the door and the case side. You simply hold the door on the jig and use the hinges as a template for the screw holes (Figure 2).

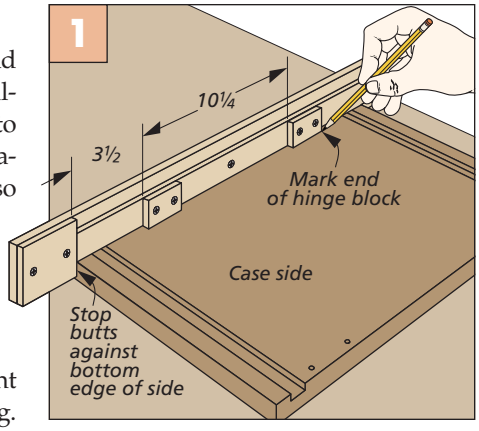

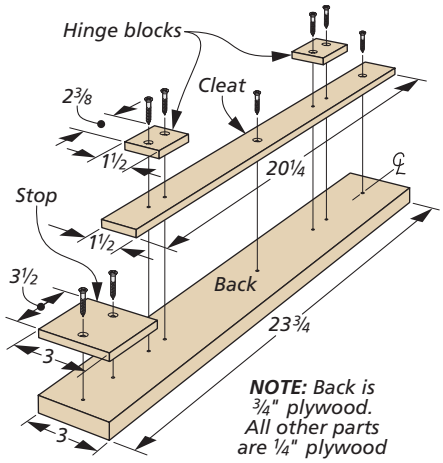

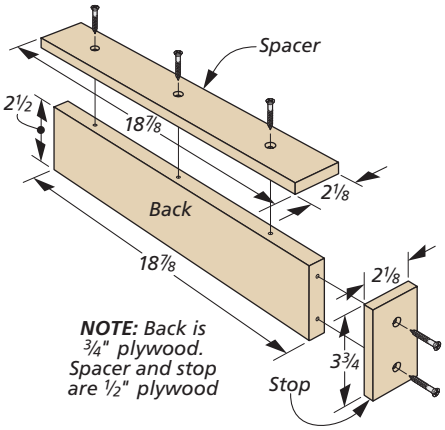

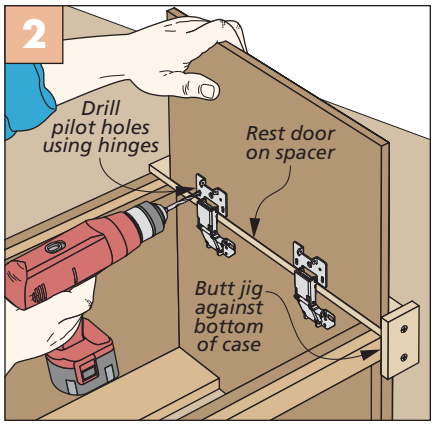

Music Stand Knobs

The music stand on page 36 requires two knob assemblies. One holds the adjustable column in place, while the other keeps the book plate in position. I bought some cherry knobs and enlarged the mounting holes to accommodate a threaded insert. Figure 1 shows the details. After drilling the holes, the threaded inserts are screwed in place.

A piece of threaded rod is then cut to length. Add a few drops of epoxy to one of the threaded inserts before threading in the rod. After the epoxy cures, the assembly is ready to use.

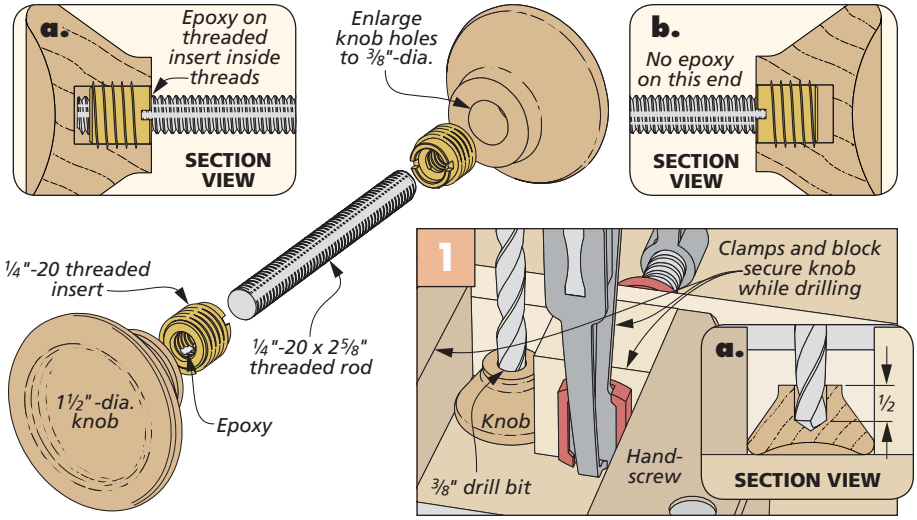

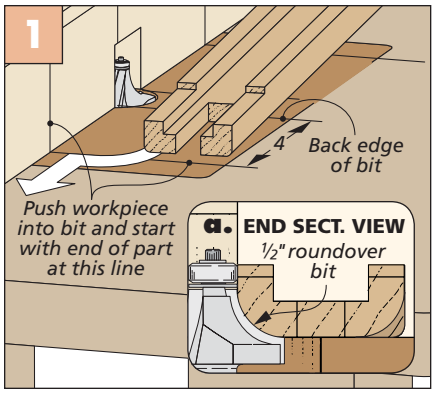

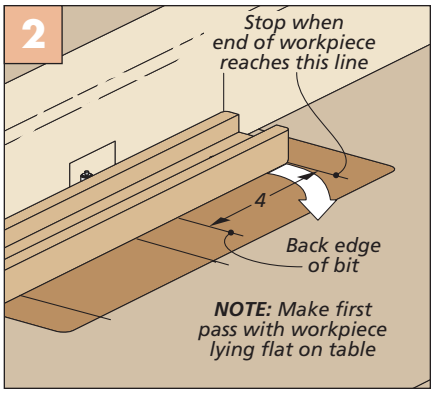

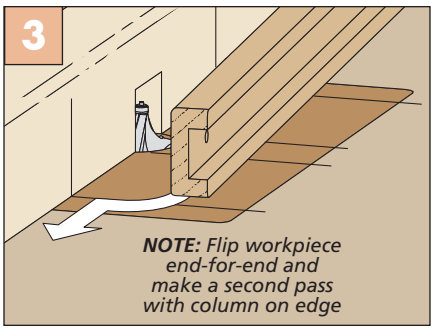

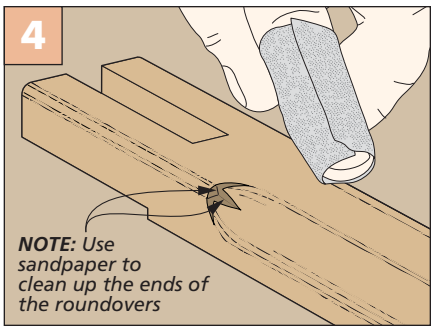

Stopped Roundovers

The column sides on the music stand (page 36) have stopped roundovers along their outside edges. These are made using a ½" roundover bit. First you need to mark the start and stop points on the router table fence, as shown in Figures 1 and 2.

Now pivot one column side into the router bit (Figure1) and make a pass with the workpiece lying flat on the table until you reach the stop point (Figure 2). Flip the workpiece end-for-end and make another pass on the same edge, but this time with the column side on edge (Figure 3). This ensures that both sides of the roundover end up being even.

After repeating steps 2 and 3 on the other edge of the column, do the same procedure to the other column half. A little hand sanding will clean up any routing marks and provide a smooth transition between the roundovers (Figure 4).

Stopped Dadoes

The sides of the puzzle box on page 20 have stopped dadoes on their inside faces to hold the dividers. The stopped dado on one end is simple to make by routing to a stop line on the router table fence, as shown in Figure 1. However, the stopped dado on the other end requires a different technique. Here you need to mark the start line on the fence and then lower the workpiece onto the spinning bit (Figure 2). You can then complete the cut by running the bit out the other side of the workpiece. W

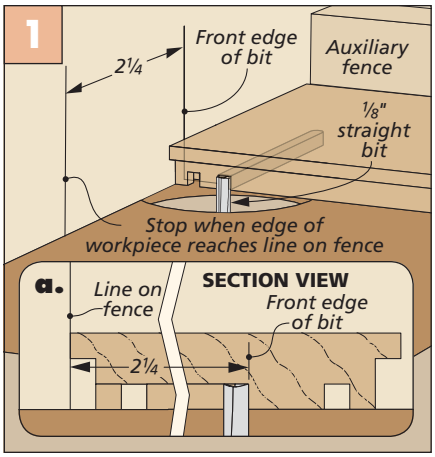

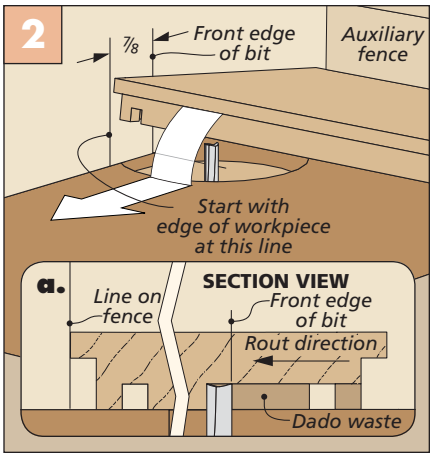

hardware & supplies
Sources

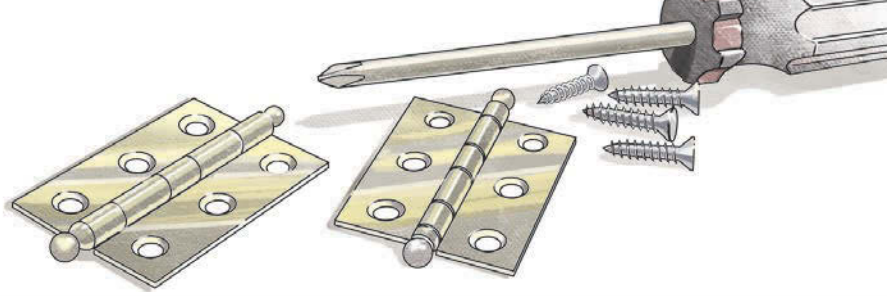

Most of the materials and supplies you'll need to build the projects are available at hardware stores or home centers. For specific products or hard-to-find items, take a look at the sources listed here. You'll find each part number listed by the company name. Refer to the right margin for contact information.

CLOCK COMPONENTS *(p.10)*

An internet search will reveal several suppliers of clock parts. The ones I use most often are *Klockit*, *Timesavers*, and *Woodcraft*.

MADE IN AMERICA *(p.14)*

All of the items in this article are readily available from one or more of the major woodworking retailers such as *Woodcraft*, *Rockler*, *Lee Valley*, *Highland Woodworking*, or *Amazon*. Selection and pricing will vary, so it pays to shop around a bit.

PUZZLE BOXES *(p.20)*

- **Lee Valley**
  14° Dovetail Bit 16J17.57

The puzzle boxes were finished with one coat of *General Finishes' Arm-R-Seal Oil & Urethane Topcoat* followed by a single coat of wax to keep the parts sliding smoothly.

ONE-WALL WORKSHOP *(p.26)*

The workbench, workstation, and cabinets were painted with *Benjamin Moore's* "Rendezvous Bay" (eggshell). The bench tops and edging were finished with two coats of spray lacquer (satin).

- **Woodcraft**
  9" Quick-Release Vise . . .144845
- **McMaster-Carr**
  Door Pulls 1078A3
- **Woodworker's Hardware**
  Surface-Mount Hinges . . LAXX1

MUSIC STAND *(p.36)*

- **Nice Knobs**
  Cherry Knobs . . . . .K103 112 CH
- **Home Depot**
  #8 Brass Washers 802861
- **Lee Valley**
  ¼"-20 Inserts 00M90.01

The rubber washers are available at most home centers and hardware stores. The music stand was sprayed with a couple coats of clear lacquer (satin).

WALL CLOCK *(p.44)*

- **Rockler**
  Brass Ball Tip Hinges 32949
  Brass Knob 35451
  Brass Turnbuttons 27912
- **Lee Valley**
  ⅜" Magnets 99K32.03
  Panel Magnet Cups . . .99K32.72
  ½" Washers 99K32.62
  Wall Hangers 00S06.20
- **Tools Today**
  Ogee Router Bit 54127
  ⅜" Bearing 47702
- **Timesavers**
  Movement w/Chime 18400
  2¾" Pendulum 18885
  6½" Dial 20326
  Hands 20698

The wall clock was finished with three coats of *Arm-R-Seal Oil & Urethane Topcoat* from *General Finishes*.

CREATING BEVELS *(p.54)*

- **Infinity Cutting Tools**
  30° Chamfer Bit 57-501
  22½° Chamfer Bit 57-502
  15° Chamfer Bit 57-503
- **Woodcraft**
  60° Chamfer Bit 158805

DRILL PRESS MORTISING *(p.56)*

- **Amazon**
  Mortising Jig B0000223B4
- **Rockler**
  Sharpening Set 24727

SHARPENING TOOLS *(p.58)*

- **Rockler**
  Diamond Hone Set 24663
- **Lee Valley**
  Auger File 51W06.20
  Comb. Waterstone 60M50.04

TENONING JIG TIPS *(p.62)*

- **General International Tools**
  Tenoning Jig 50-050

THE FUTURE OF WOODWORKING IS HERE!

Woodsmith VIDEO EDITION

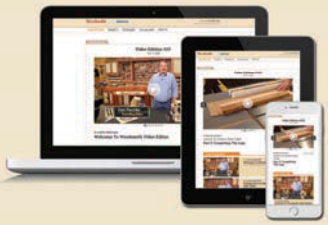

- Be a Founding Member and get access to new videos every week — 125+ videos per year!
- 26 Weekly Video Editions — includes Heirloom Projects, Shop Projects, Step-by-Step Techniques, and Shop Tips!
- Plus, 26 Weekly Talking Shops — features in-depth Talking Shop videos, plus bonus Shop Tips.

WoodsmithVideoEdition.com

MAIL ORDER SOURCES

Project supplies may be ordered from the following companies:

amazon.com

Benjamin Moore
benjaminmoore.com

General Finishes
800-783-6050
generalfinishes.com

General Int'l Tools
888-949-1161
general.ca

Highland Woodworking
800-241-6748
highlandwoodworking.com

Home Depot
800-466-3337
homedepot.com

Infinity Cutting Tools
877-872-2487
infinitytools.com

Klockit
800-556-2548
klockit.com

Lee Valley
800-871-8158
leevalley.com

McMaster-Carr
630-833-0300
mcmaster.com

Nice Knobs
908-832-2723
niceknobs.com

Rockler
800-279-4441
rockler.com

Timesavers
800-552-1520
timesavers.com

Tools Today
888-699-3939
toolstoday.com

Woodcraft
800-225-1153
woodcraft.com

Woodworker's Hardware
800-383-0130
wwhardware.com

looking inside
Final Details

◄ *Wall Clock.* Arched moldings and a stenciled glass door provide just the right details for this heirloom project. Plans begin on page 44.

▲ *Puzzle Boxes.* There's a special "trick" to these boxes. But don't worry — we share the secrets to building them, as well as opening them, starting on page 20.

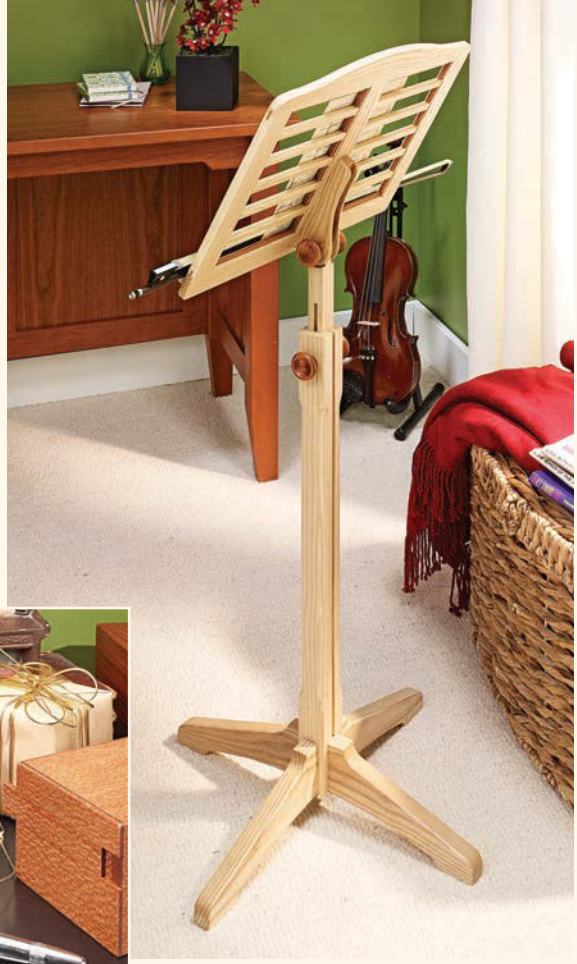

▲ *Music Stand.* Tune up your woodworking skills by building this adjustable music stand. It features some unique interlocking joinery. We'll walk you through building it beginning on page 36.

▲ *One-Wall Workshop.* Perfect for a garage or basement, this project packs a workbench, workstation, router table and planer stand all into about 14 feet of wall space. And we've also included plenty of overhead storage. The best part is that it's modular, so you can build all of it or just the components you need. Turn to page 26 to read more.